snapmaker | A150

QUICK START GUIDE

MAKE SOMETHING WONDERFUL

Make Something Wonderful

Three years ago, when we were designing the Snapmaker Original, we broke the rules of traditional desktop 3D printers and created the first modular 3-in-1 3D printer on the market. At first, The Verge and a lot of other reviewers doubted that "Snapmaker is an upcoming Kickstarter project with a lofty goal: to be the holy trinity for at-home makers by using detachable modules to convert between a 3D printer, a CNC carver, and a laser engraver," and that "At the price that Snapmaker is selling, it's possible the whole thing is too good to be true." We knew people had a lot of uncertainty about our project and were hesitant to back us because of the complexity of designing and making such a product. Despite all the doubts, we worked hard on pushing the boundaries of possibility, and we eventually made the impossible possible. Not only did we fulfill all the rewards, but we also sold over 10,000 units all over the world in 2018.

Welcome to the World of Making

And in 2019, we launched the Snapmaker 2.0. We went beyond our limits once again. Our goal is to build a system behind our modular 3D printers and give you the best maker tools that can work for all your projects. As creatives, we all desire to make something wonderful and creativity makes us feel alive. The Snapmaker 2.0 will help you turn your idea into reality. This Quick Start Guide will guide you through your maker journey and take you from building your own 3D Printer, Laser Cutter, and CNC Carver to making your first creations utilizing all these modules. Congratulations on becoming part of the Snapmaker community! Thousands of people like you are using the Snapmaker to explore, make, and share in the world of making. We believe that wonderful things will happen when creative minds meet the ideal tools. Have fun making and see you in our community!

Team Snapmaker

Happy Making

This machine is built for innovators. Our goal is to assist you to make the world a better place with a machine we built with love. The project could be as small as a Christmas gift, or as ambitious as exploring unknown territories of our mankind. Dream big and make it happen.

Modular System

Snapmaker is not only a 3D printer, but also a powerful machine that you can customize with addons. You can equip your Snapmaker with an enclosure to protect you and your family from laser and contaminants. New addons are coming soon with more exciting features. Please stay tuned.

CONTENTS

01 Before You Start

12 Machine Assembly

26 3D Printing

42 Laser Engraving and Cutting

58 CNC Carving

BEFORE YOU START

Copyright © 2020 Snapmaker. All rights reserved.
This language version of the manual is verified by the manufacturer (Original Instruction). No part of this publication, including pictures may be reproduced or made public, whether by printing, photocopying, microfilm or by any other means whatsoever, without the prior written permission of Snapmaker.

1.1 Disclaimer

Please read and understand the contents of the manual of this product carefully. Failure to read the manual may lead to personal injury, inferior results or damage to the Snapmaker products. Always make sure that anyone who uses this product knows and understands the contents of this manual to make the most out of it.

This manual is provided for reference purposes only, we do not warrant the accuracy or completeness of the information provided by this manual. We reserve the right to modify or revise this manual in our sole discretion at any time without notice, users can download the most up-to-date version of this manual on our official website.

When making objects using Snapmaker products, users remain responsible to ensure that they do not infringe any third party intellectual property rights or violate any applicable laws or regulations. The conditions or methods used for assembling, handling, storage, use, maintaining or disposal of this product are beyond our control. For this reason, we do not assume responsibility and expressly disclaim liability for loss, injuries, damage, or expense arising out of or in any way connected with the assembly, handling, storage, use, maintaining or disposal of this product.

1.2 Intended Use

Snapmaker modular 3D printers come with improved 3-in-1 capabilities for 3D printing, laser engraving or cutting, and CNC carving. Snapmaker modular 3D printers are the ideal choice for beginners, hobbyists who prefer more customized options, as well as engineers and designers who want to make large objects or fine parts with outstanding fabrication quality. Snapmaker modular 3D printers are intended for use under the guidance in the product manual. When making objects using Snapmaker modular 3D printers, users remain responsible to qualify and validate the application of the created object for its intended use, especially for applications in strictly regulated areas like medical devices and aeronautics.

1.3 Safety and Compliance

General Safety Information

- Always operate this machine indoors on a solid horizontal table or workbench.
- Do not expose this machine to rain or wet conditions.
- Keep children and bystanders away while operating this machine. It requires the supervision and assistance of an adult when children use this machine.
- Stay alert, watch what you are doing and use common sense when operating this machine. Do not use this machine while you are tired or under the influence of drugs, alcohol or medication.
- Do not reach inside the machine or touch the moving parts while the machine is still in operation, as it may cause injury.
- Do not leave the machine unattended while it is still on.

In all EU member states, operation of 5150-5250 MHz is restricted to indoor use only.

AT	BE	CY	CZ	DK	EE	FI
FR	DE	EL	HU	IE	IT	LV
LT	LU	MT	NL	PL	PT	SK
SI	ES	SE	UK	BG	RO	HR

Turn off the machine immediately and stop using this product, if any of the following occurs:

- You smell burning in this machine at any point.
- The machine stops working unexpectedly.
- You see any damage to the interior components of this machine.
- Unusual lights, sparks, or sounds come out of this machine which were not occurring previously.

3D Printing Safety

- Do not touch the nozzle, Print Sheet and Heated Bed when the machine is printing or heating.
- Always unplug the power cord from the electrical outlet before performing maintenance or modifications.
- Set up the printer in a well-ventilated place when printing with ABS. The melting of some materials may release toxic fumes.

Laser Safety

- The Laser Module is a class 4 laser product. You should operate the Laser Module only if you have sufficient knowledge of (i) the physical properties of laser radiation, (ii) Laser Hazard Classes and associated health implications, and (iii) safety measures.
- This laser product should be used exclusively for recreational purposes.
- Never expose yourself to the laser beam. Proper use and care of the Laser Module are essential to safe operation.
- Operate the Laser Module in a well-ventilated place or with an air filter. The melting of some materials may release toxic fumes.
- Always unplug the power cord from the electrical outlet before performing maintenance or modifications.
- Remove any reflective material from the work area underneath the Laser Module, as it can cause scattered radiation.
- Operate the machine with an enclosure covered and wear the Laser Safety Goggles.

The laser safety goggles block direct, reflected, and scattered laser beams and radiation with the wavelength between 190 and 540 nanometers (nm) and the optical density higher than 6 (OD 6+), from entering your eyes, thus providing protection while you operate with the Laser Module.

The lenses might be burned when subjected to high energy laser beams, and if this happens, you must stop using the damaged goggles and use a new pair. Also, due to the qualities of polycarbonate which is used to synthesize the lenses, you should use PH neutral detergent or water to clean them and avoid scraping them.

CNC Safety

- For experienced users and users aged 18 and above.
- Operate the machine with an enclosure covered and wear the CNC Safety Goggles.
- Always have the material securely clamped. Never attempt to hold the workpiece with your hands throughout the CNC carving process.
- Always unplug the power cord from the electrical outlet before performing maintenance or modifications.
- If the bit or workpiece become jammed or bogged down, turn off the machine immediately. Wait for all moving parts to stop and unplug the cable, and then work to free the jammed material.
- -Do not touch the bit or collet after use, as doing so can cause burn hazards.
- Discharge from CNC carving and cutting contains chemicals known to cause cancer and harm to reproductive system. To reduce exposure, operate the CNC Module in a well-ventilated place and take safety precautions such as wearing an N-95 mask.

FCC Compliance

This equipment has been tested and found to comply with the limits for a Class B digital device, pursuant to part 15 of the FCC Rules. These limits are designed to provide reasonable protection against harmful interference in a residential installation. This equipment generates, uses and can radiate radio frequency energy and, if not installed and used in accordance with the instructions, may cause harmful interference to radio communications. However, there is no guarantee that interference will not occur in a particular installation. If this equipment does cause harmful interference to radio or television reception, which can be determined by turning the equipment off and on, the user is encouraged to try to correct the interference by one or more of the following measures:

- Reorient or relocate the receiving antenna.
- Increase the separation between the equipment and receiver.
- Connect the equipment into an outlet on a circuit different from that to which the receiver is connected.
- Consult the dealer or an experienced radio / TV technician for help.

Caution: Any changes or modifications to this device not explicitly approved by manufacturer could void your authority to operate this equipment.

This device complies with part 15 of the FCC Rules. Operation is subject to the following two conditions:
(1) This device may not cause harmful interference, and (2) this device must accept any interference received, including interference that may cause undesired operation.

This equipment complies with FCC radiation exposure limits set forth for an uncontrolled environment. This equipment should be installed and operated with minimum distance 20cm between the radiator & your body.

ISEDC Compliance

This device complies with Innovation, Science and Economic Development Canada License exempt RSS standard(s). Operation is subject to the following two conditions:
(1) this device may not cause harmful interference, and (2) this device must accept any interference received, including inter ference that may cause undesired operation of the device.

Le présent appareil est conforme aux CNR d' Innovation, Sciences et Développement économique Canada applicables aux appareils radio exempts de licence. L'exploitation est autorisée aux deux conditions suivantes :
(1) l'appareil nedoit pas produire de brouillage, et(2) l'utilisateur de l'appareil doit accepter tout brouillage radioélectrique subi, même si le brouillage est susceptible d'en compromettre le fonctionnement.

The device is compliance with RF exposure guidelines, users can obtain Canadian information on RF exposure nd compliance. The minimum distance from body to use the device is 20cm.

Le présent appareil est conforme Après examen de ce matériel aux conformité ou aux limites d’intensité de champ RF, les utilisateurs peuvent sur l’exposition aux radiofréquences et compliance d’acquérir les informations correspondantes. La distance minimale du corps à utiliser le dispositif est de 20cm.

1.4 Labels on Your Snapmaker

Safety Labels	Hazard	Warning	Location
	Hot surface	Avoid contact with hot surface.	On the 3D Printing Module, Print Sheet and Heated Bed
	Sharp objects	Take care to avoid injury from sharp objects (e.g. CNC Bits).	On the CNC Module
IEC 60825 FDA	Laser radiation	Class 4 laser product. Avoid eyes and skin exposure to direct or scattered radiation.	On the Laser Module
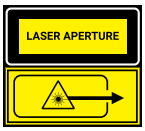 IEC 60825 FDA	Laser aperture	Laser radiation is emitted from this aperture.	On the Laser Module

1.5 Specifications

General	
Frame Material	Aluminum Alloys
Connectivity	Wi-Fi, USB Cable, USB Disk
Touchscreen	5”TFT, Android System
Software	Snapmaker Luban and third-party software
Supported File Types	.stl, .obj, .svg, .jpeg, .png, more formats to be added
Supported OS	MacOS, Windows, Linux
Rated Power	320 W
3D Printing	
Build Volume	A150: 160 x 160 x 145 mm A250: 230 x 250 x 235 mm A350: 320 x 350 x 330 mm
Heated Bed Temperature	A150: Up to 110°C A250: Up to 100°C A350: Up to 80°C
Layer Resolution	50 - 300 microns
Nozzle Temperature	Up to 275°C
Nozzle Diameter	0.4 mm
Supported Materials	PLA, ABS, TPU, Wooded PLA, etc.
Laser	
Work Area	A150: 160 x 160 mm A250: 230 x 250 mm A350: 320 x 350 mm
Laser	1,600 mW 450 nm Laser Diode
Wavelength	450 nm
Safety Class	Class 4
Supported Materials	Wood, leather, plastic, fabric, paper, nontransparent acrylic, etc.
CNC	
Work Area	A150: 160 x 160 x 90 mm A250: 230 x 250 x 180 mm A350: 320 x 350 x 275 mm
Shank Diameter	0.5 mm - 6.35 mm (0.02 - 0.25 inches)
Spindle Speed	6,000 - 12,000 RPM
Supported Materials	Wood, acrylic, PCB, carbon fiber sheet, jade, etc.

Note: Design and specifications are subject to change without notice.

1.6 Parts List

Linear Module **x 3**

3D Printing Module **x 1**

Laser Module **x 1**

CNC Module **x 1**

Touchscreen **x 1**

Touchscreen Holder **x 1**

Toolhead Cable **x 1**

Controller **x 1**

Base Plate **x 1**

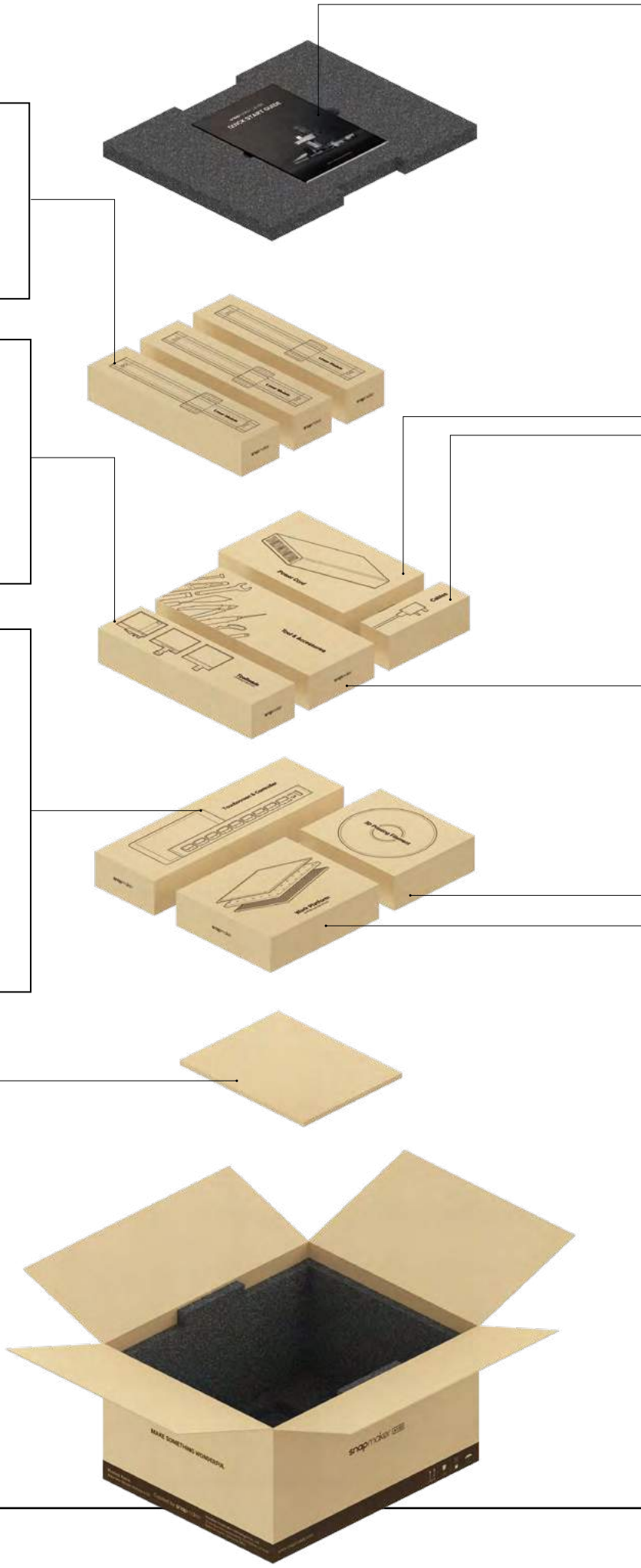

Power Module x 1

Quick Start Guide x 1

DC Power Cable x 1

AC Power Cable x 1

USB Cable x 1

Laser Safety Goggles x 1

CNC Safety Goggles x 1

Tool Box x 1

Fixture Accessory x 4

Arched Fixture x 4

Filament Holder Sheet x 1

Filament Holder Tube x 1

CNC Carving Platform x 1

Laser Engraving/Cutting Platform x 1

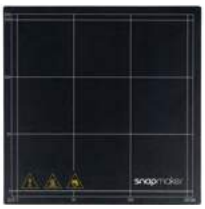

Print Sheet x 1

Heated Bed x 1

Material Bag x 1

Filament x 1

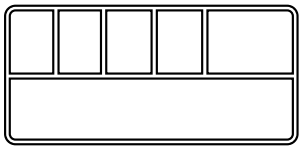

Tool Box

M4 x 30 Screw **x 4**

M4 x 10 Hex Socket Head Screw **x 7**

M4 x 8 Screw **x 22**

M4 x 70 Screw **x 4**

Wing Nut **x 4**

Foot **x 4** + M4 x 10 Hex Socket Head Screw **x 4**

Hot End Kit **x 1**

ER11 Collet (Only for 3.175 mm CNC Bits) **x 1** + ER11 Nut **x 1**

Divider **x 6**

Cable Holder **x 1**

Cable Tie **x 1**

Steel Strip Adjustor (For Maintenance) **x 1**

Tweezers **x 1**

Flat End Mill **x 1**

Ball End Mill **x 1**

Silicone Plug **x 8**

USB Disk **x 1**

17mm Open-End Wrench **x 1**

Diagonal Pliers **x 1**

Palette Knife **x 1**

14mm Open-End Wrench **x 1**

Screwdriver **x 1**

Material Bag

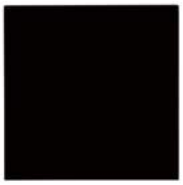

CNC Material **x 1**

Laser Material **x 2**

Wiping Cloth **x 1**

Calibration Card **x 2**

1.7 Video Tutorials

Apart from this Quick Start Guide, we also make video tutorials. Read this guide to finish assembly, and if you are feeling adventurous, tricks that are not included in this guide can be found in the video tutorials. Visit our website at https://support.snapmaker.com/hc/en-us-> select **Snapmaker 2.0** -> Go to **Video Tutorial**.

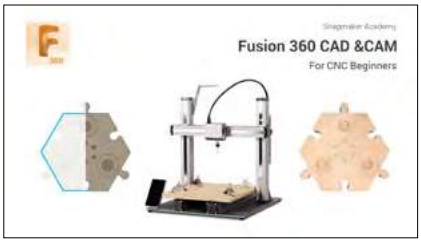

1.8 Used Symbols

	CAUTION	Ignoring this type of message might result in malfunction or damage of the machine and injuries to users.
	NOTE	Details you should be aware of throughout the process.
	TIPS	Tips offer you convenient operations and additional options.
		Make sure that the highlighted part is facing the right way.
		Do not tighten the screws when this symbol appears. Always tighten the screws when it is absent.

1.9 Get the Screwdriver Ready

The screwdriver head H 2.5 is used for assembling the machine. The other heads are used for maintenance. Make sure the screw head holder has been put back inside of the handle before use.

MACHINE ASSEMBLY

01/10

Attach the feet to the Base Plate.

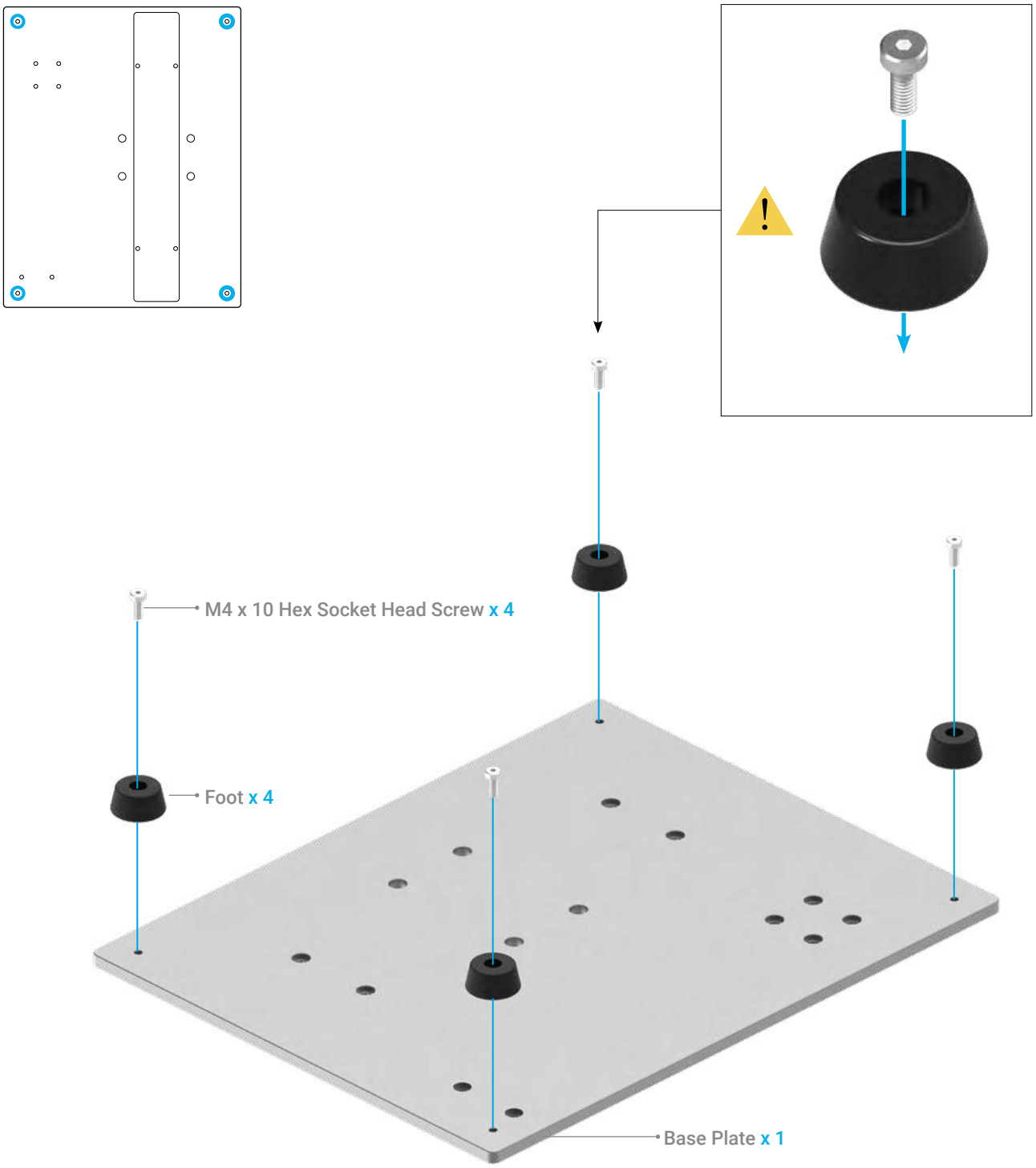

02/10

Attach the Heated Bed to any one of the Linear Modules (Y axis).

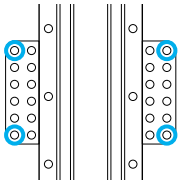

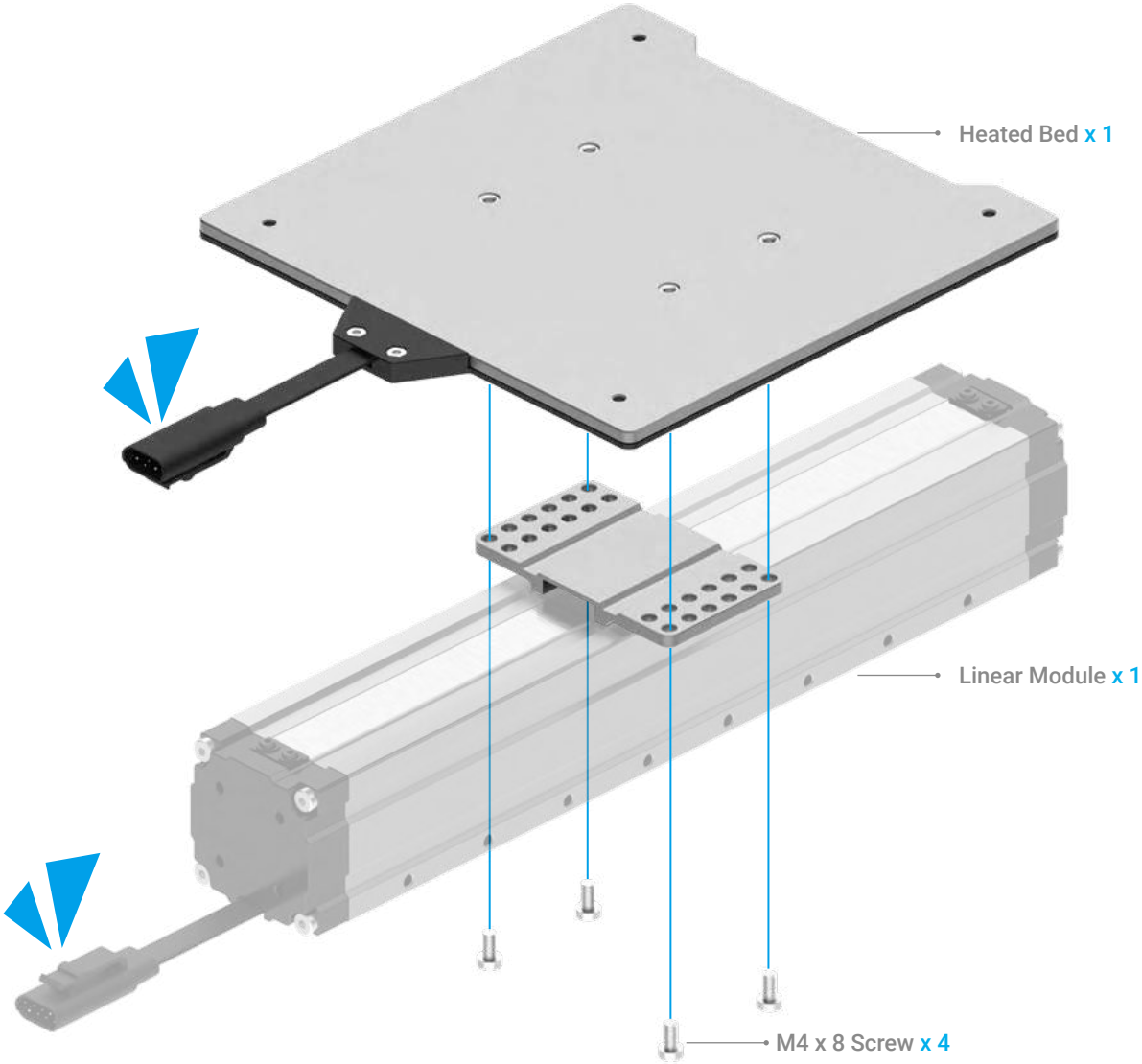

Do not press the steel strip.

03/10

Attach the Y axis to the Base Plate.

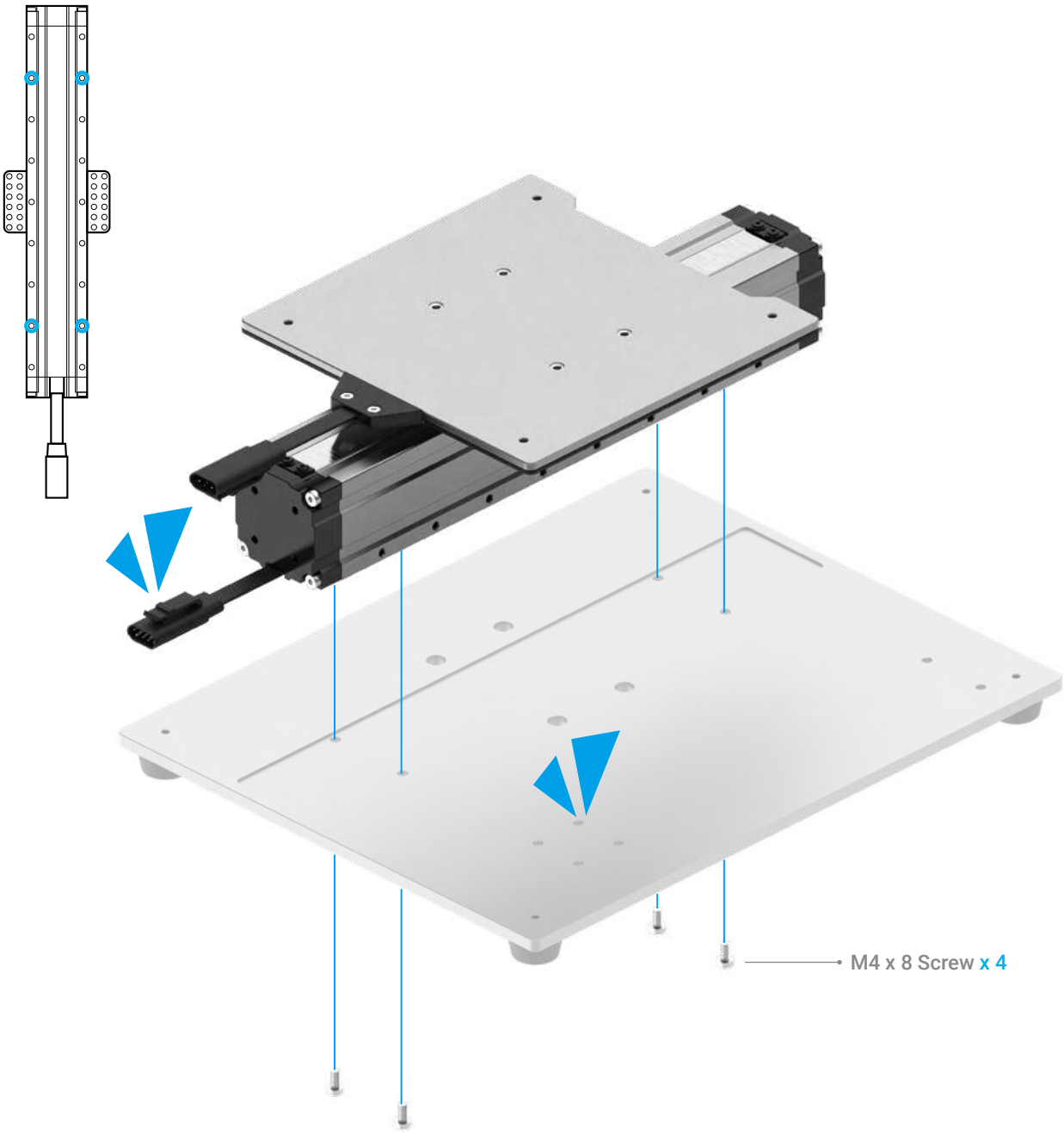

Make sure the Y axis is accurately mounted onto the groove of the Base Plate.

04/10

Attach the Touchscreen Holder to the Base Plate.

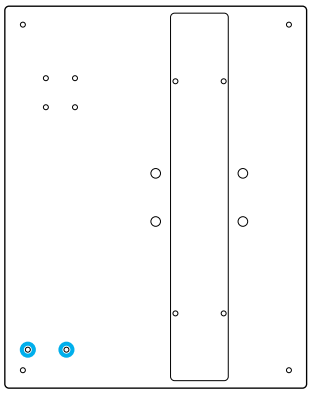

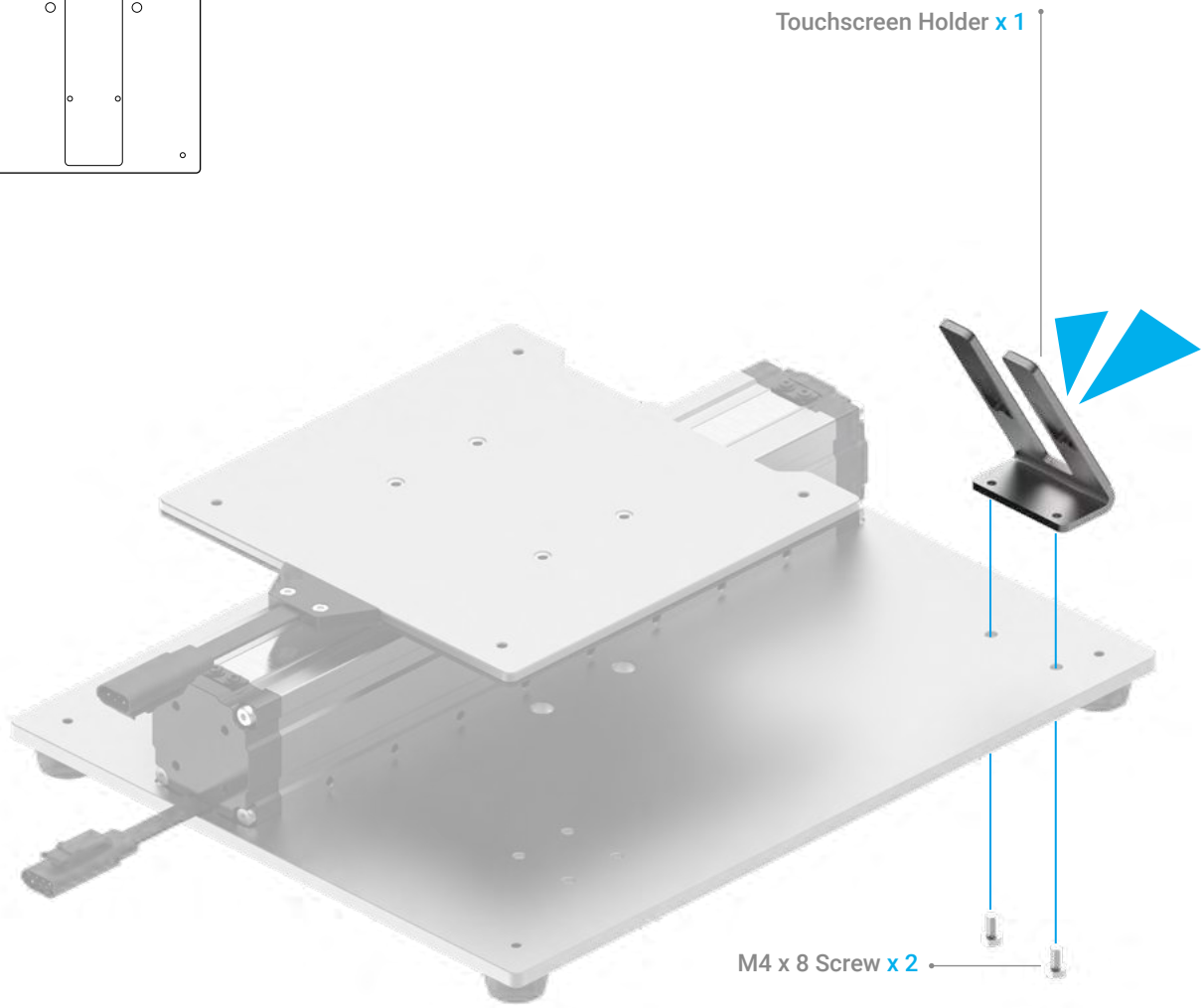

05/10

Attach the Z axis to the Base Plate.

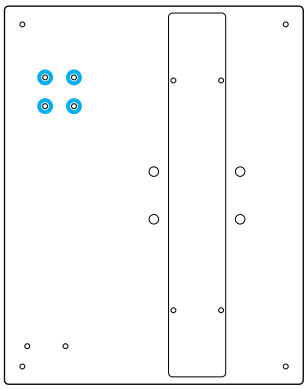

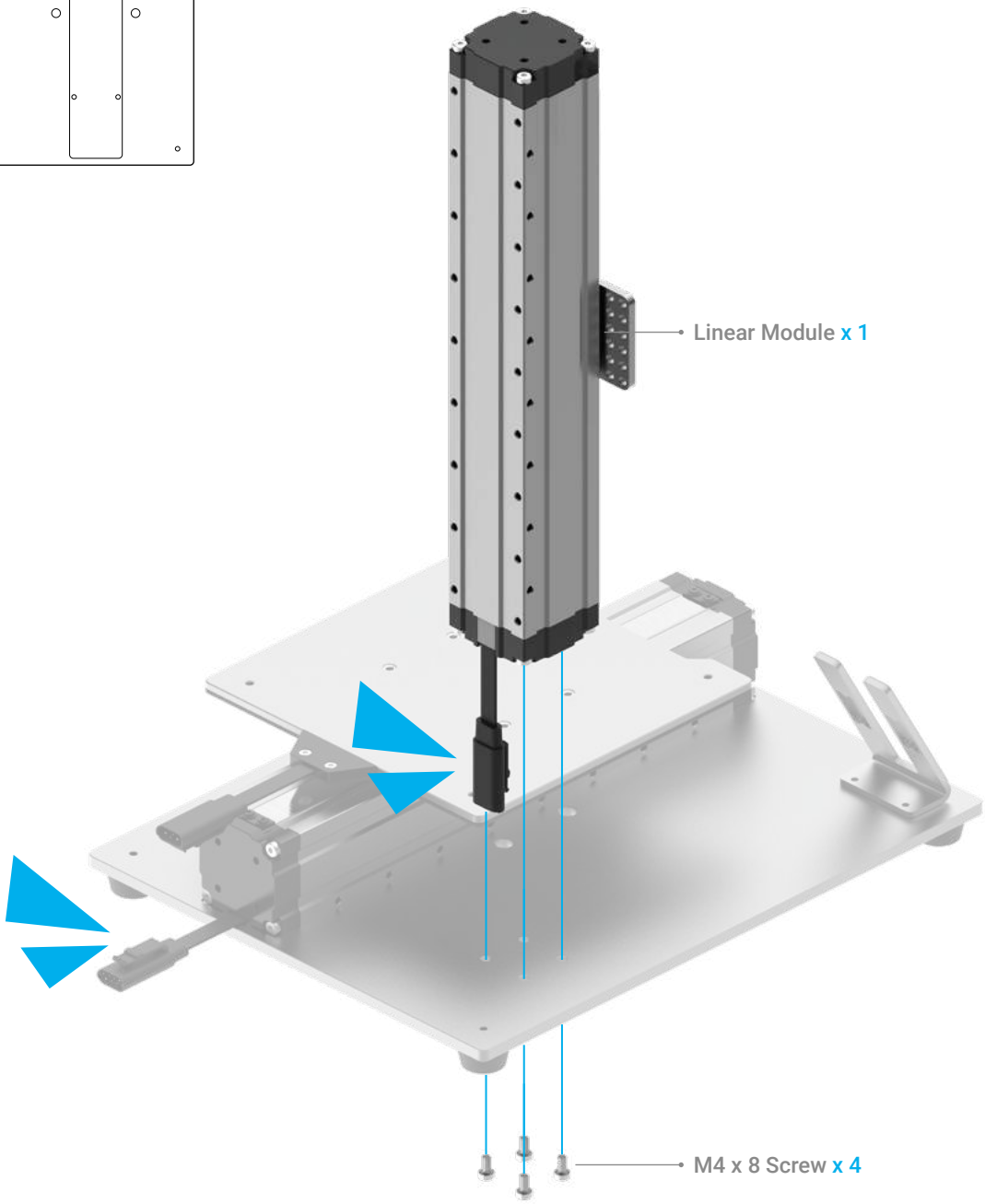

06/10

Move the Z-axis slider to the top, and then attach the X axis to the Z axis.

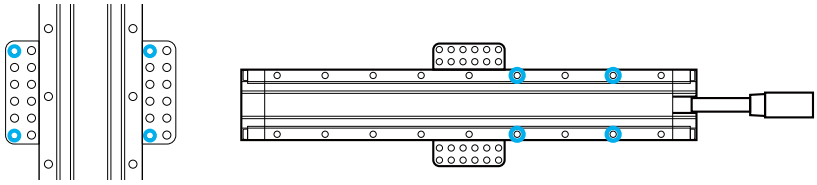

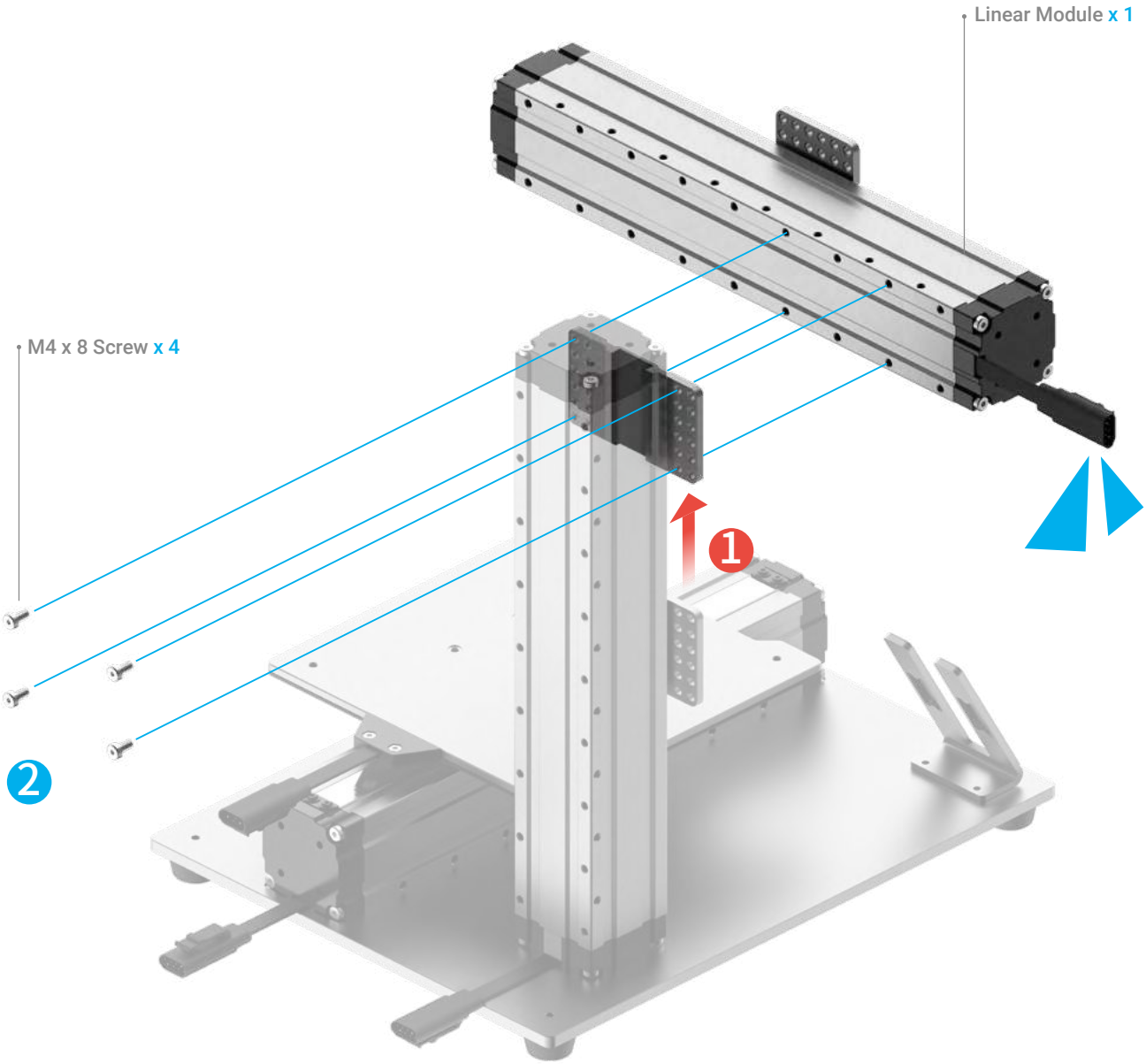

07/10

Attach the Controller to the Z axis.

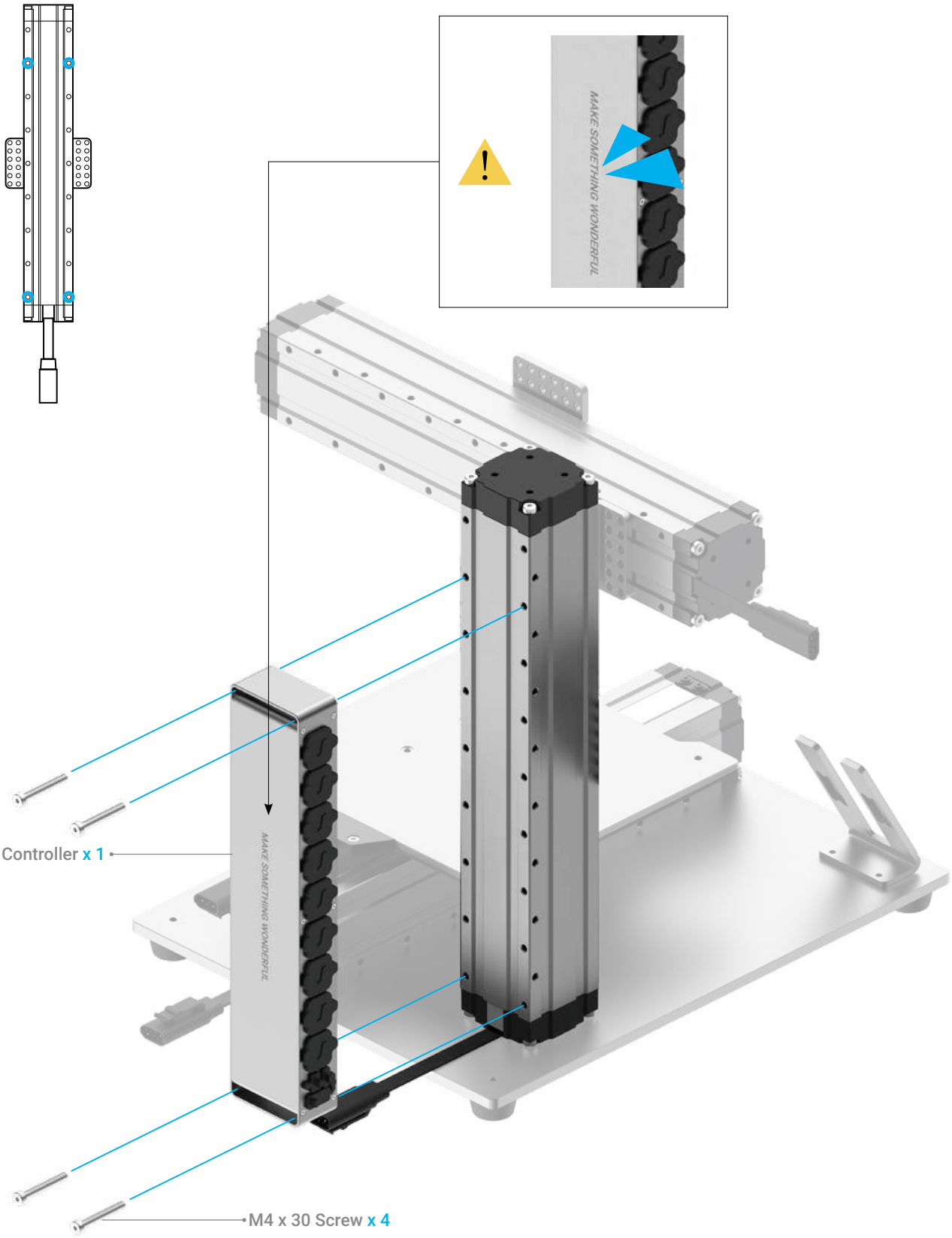

08/10

Open the dust plugs, and then connect the X, Y, Z axes and the Heated Bed with the Controller.

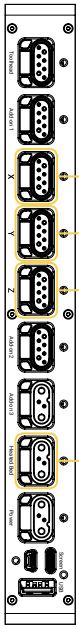

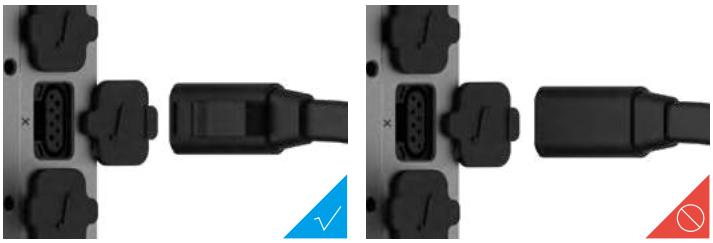

Make sure the connectors are in the right direction.

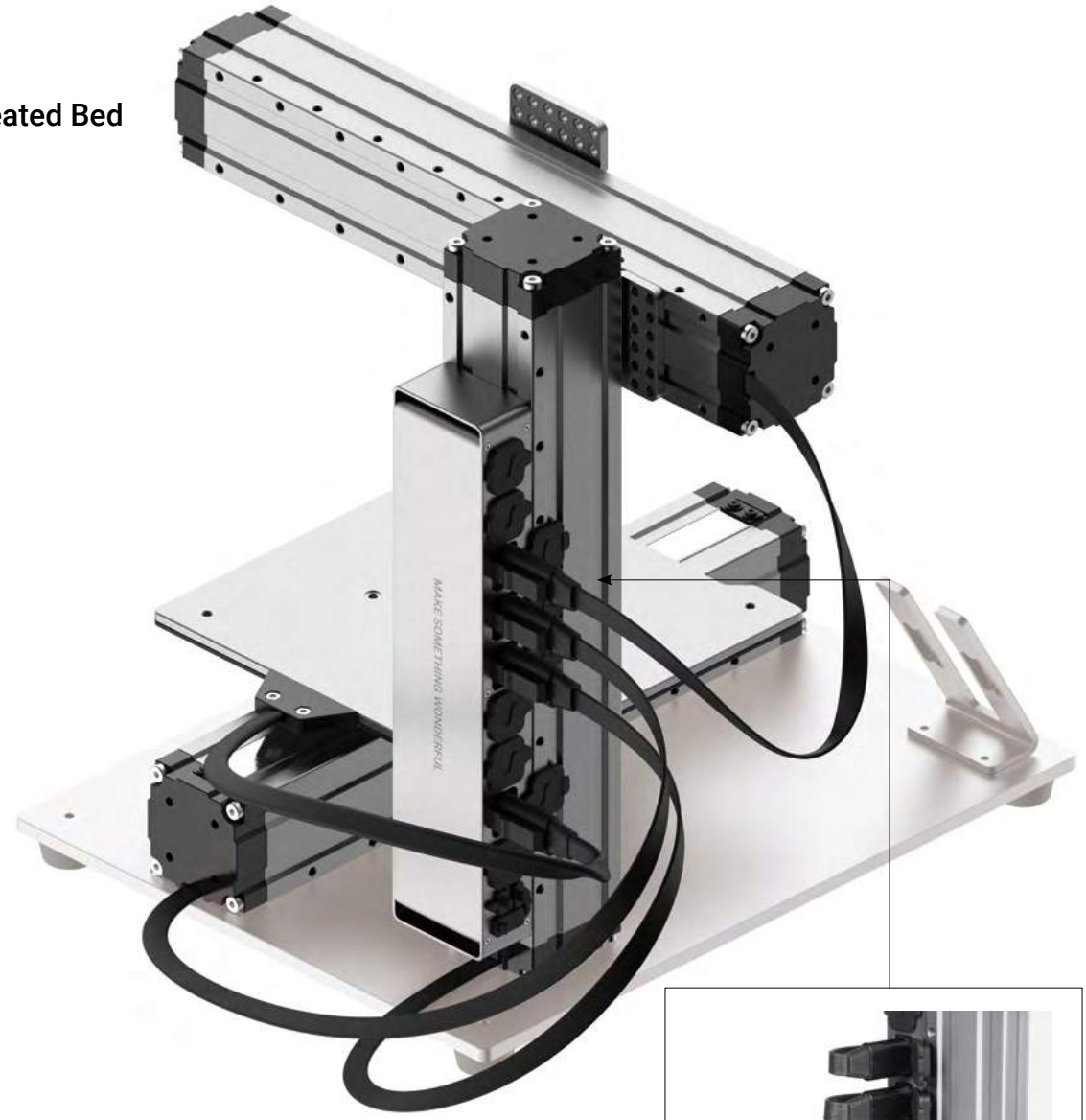

Keep the protective dust plugs on the unplugged connectors. Dust accumulation may seriously affect the performance of the Controller.

09/10

Place the Touchscreen on its holder; then connect the Touchscreen with the Controller.

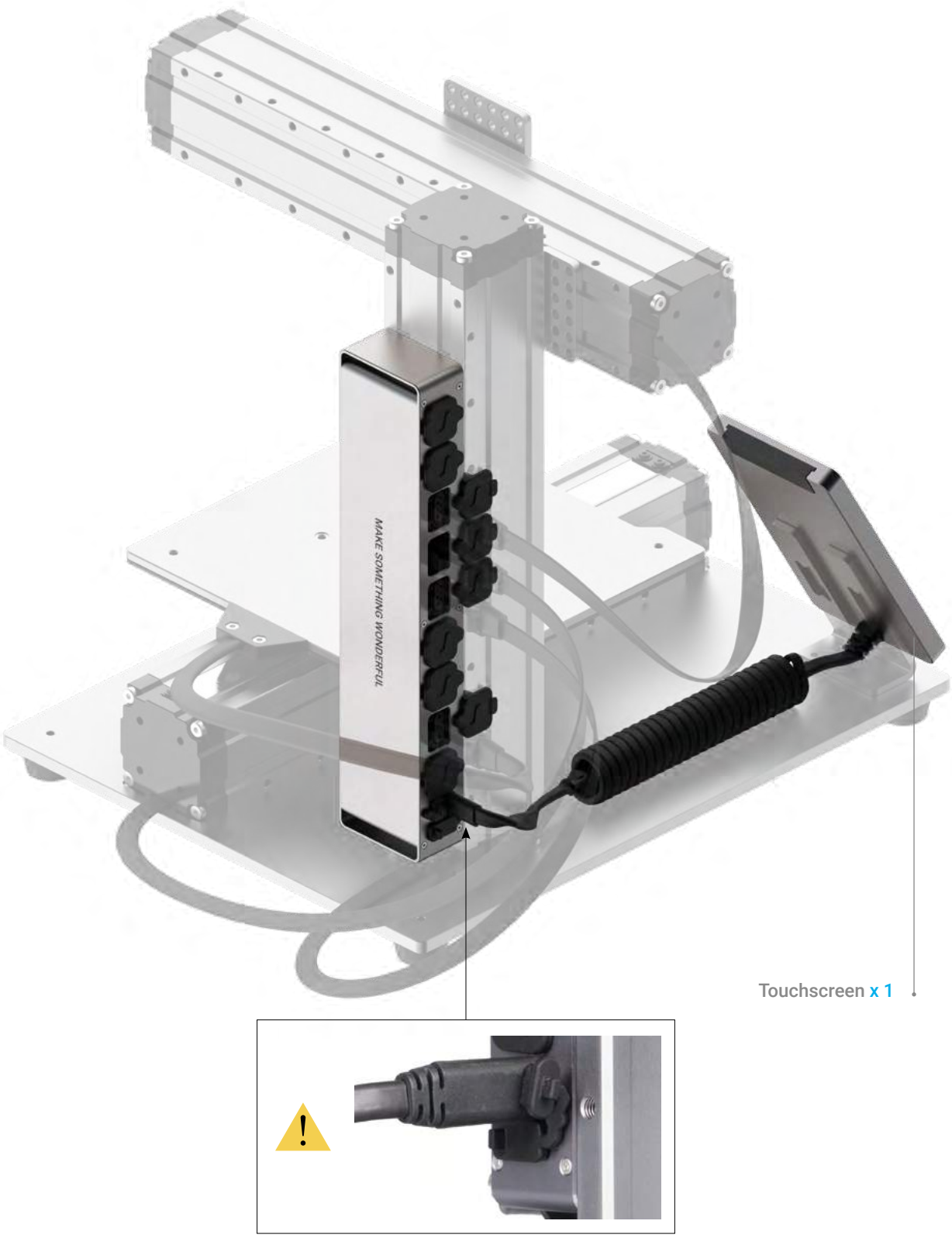

10/10

Connect the cables for the Power Module.

Do not connect or disconnect any cables when the machine is powered on.

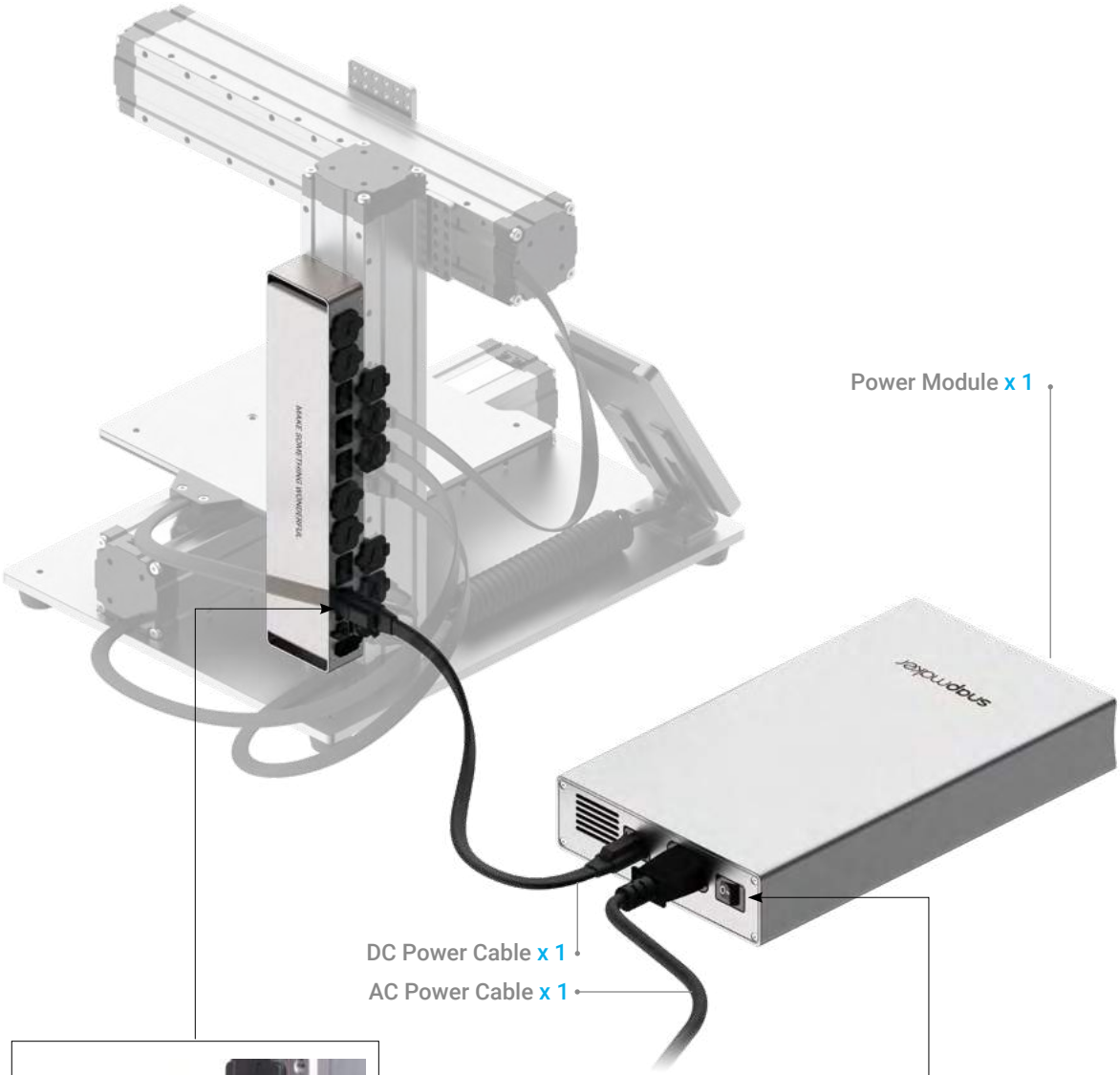

Make sure the power switch is in the Off position.

Absolutely amazing!

You have successfully assembled the machine body. Now just select one function to complete the assembly and bring your first job into the world!

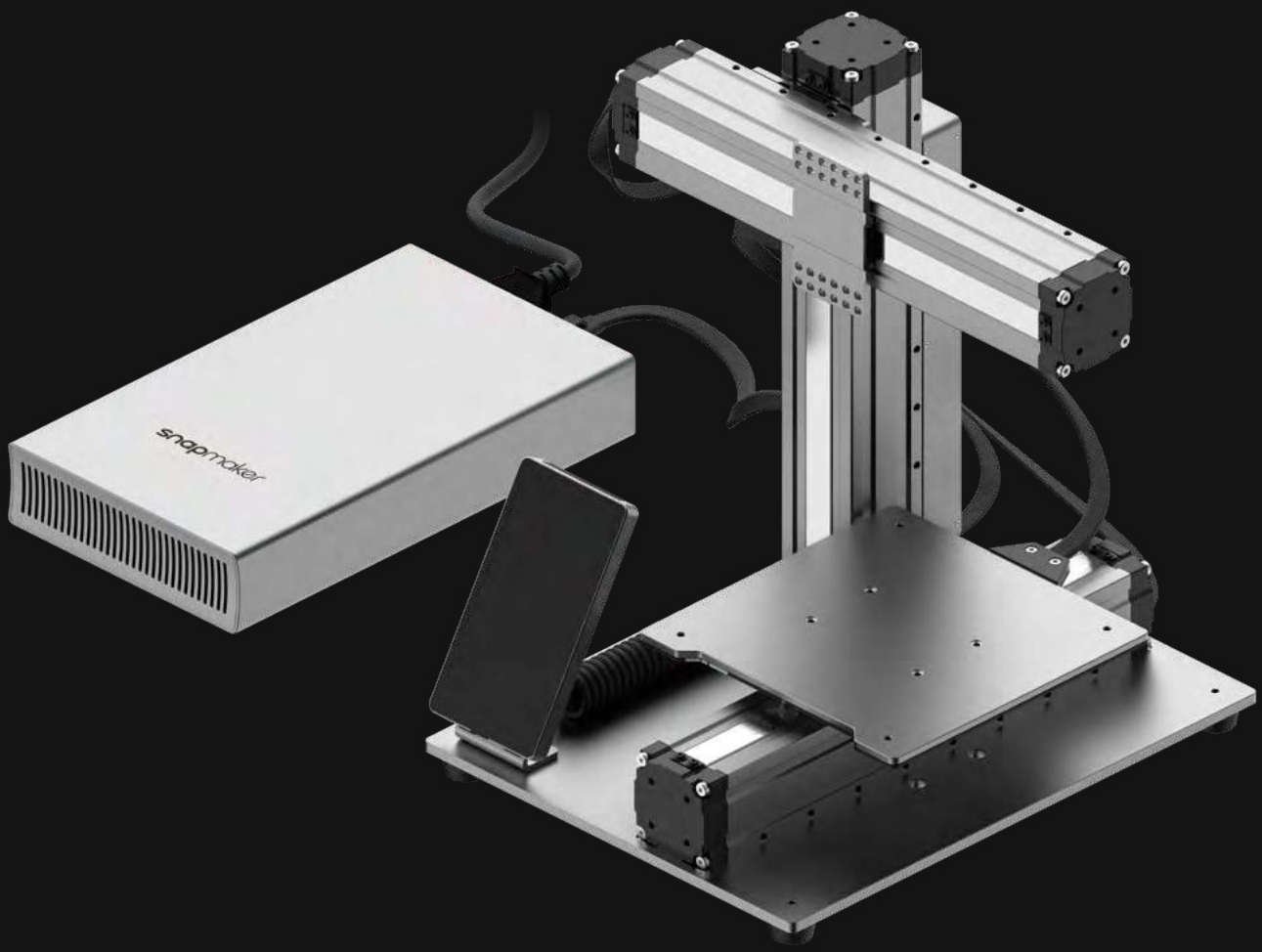

3D Printing

PAGE 26

Laser Engraving and Cutting

PAGE 42

CNC Carving

PAGE 58

snapmaker
3D PRINTING
snapmaker
LASER
1600mW
snapmaker
CNC

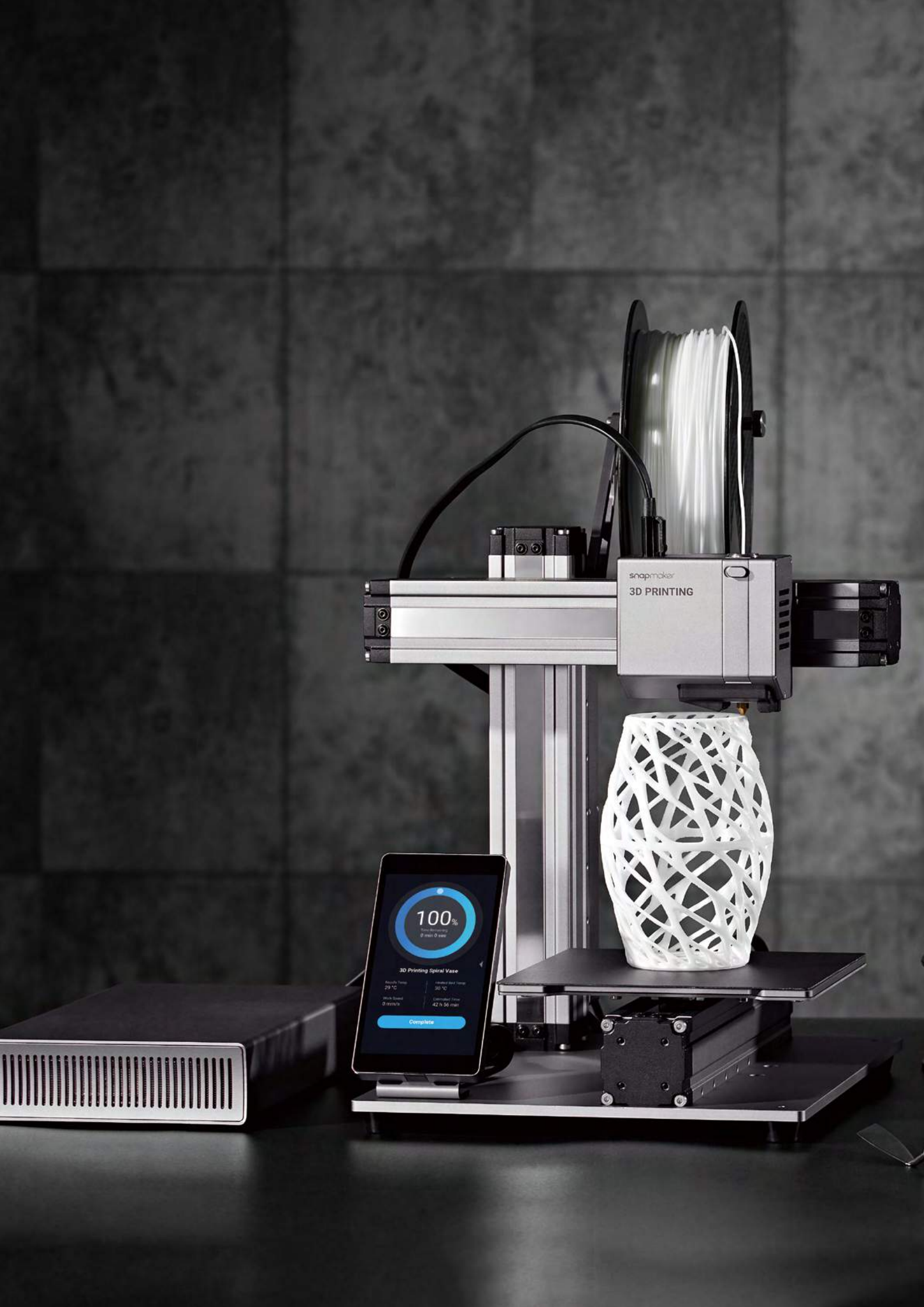
snapmaker
3D PRINTING
100%
3D Printing Spiral Vase
Complete

3D Printing

3.1 Assembly

3.1.1 Assemble the 3D Printer

3.1.2 Initial Setup

3.2 Get Started

3.2.1 Calibrate the Bed

3.2.2 Load Filament

3.3 Start Printing

3.3.1 Prepare the G-code File

3.3.2 Start Your First Print

3.3.3 Remove the Print

3.1.1 Assemble the 3D Printer

Guides & Pictures / Snapmaker

01/04

Attach the 3D Printing Module to the slider on the X axis.

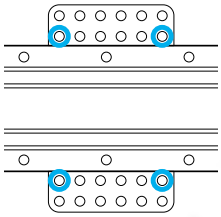

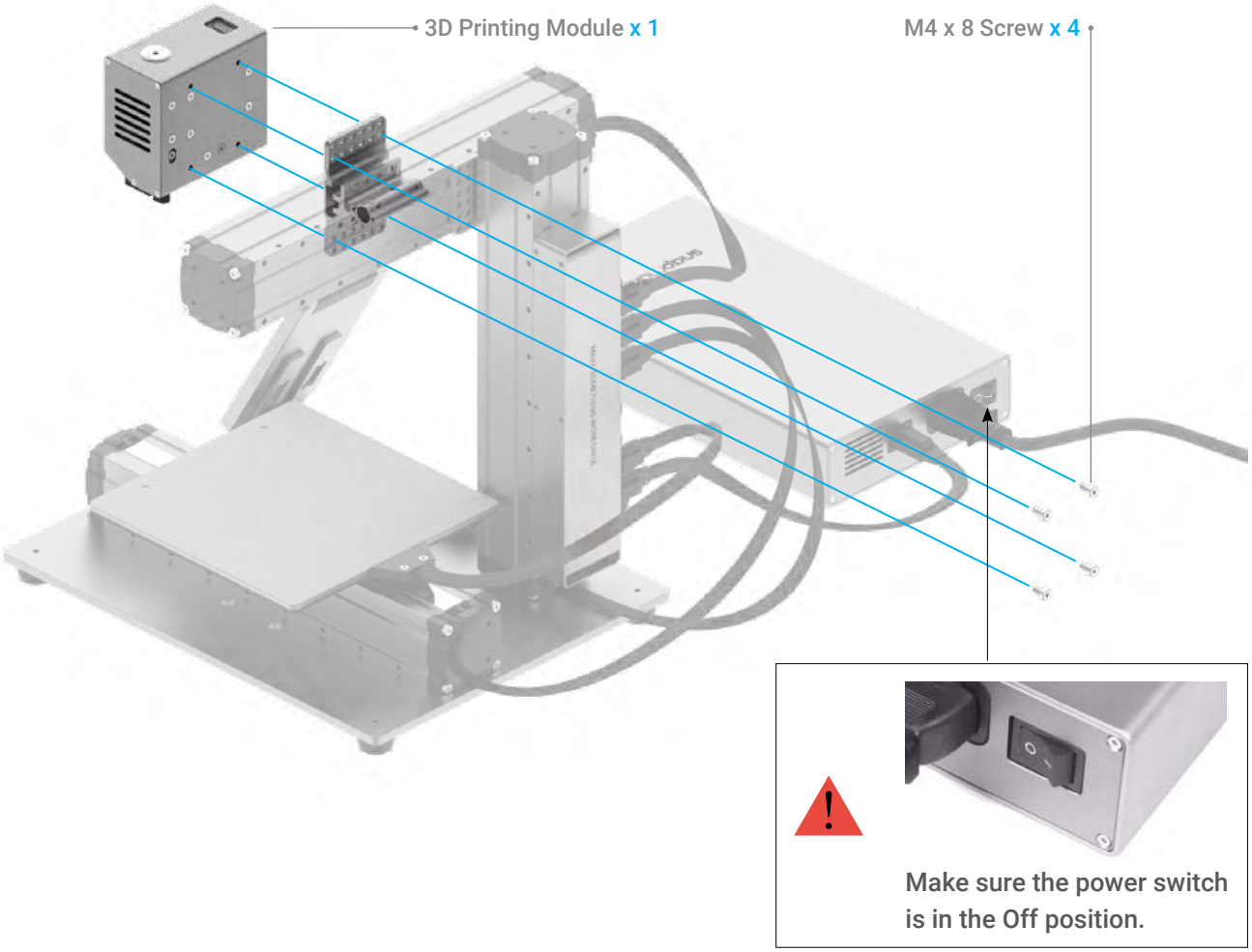

02/04

Connect the 3D Printing Module with the Controller.

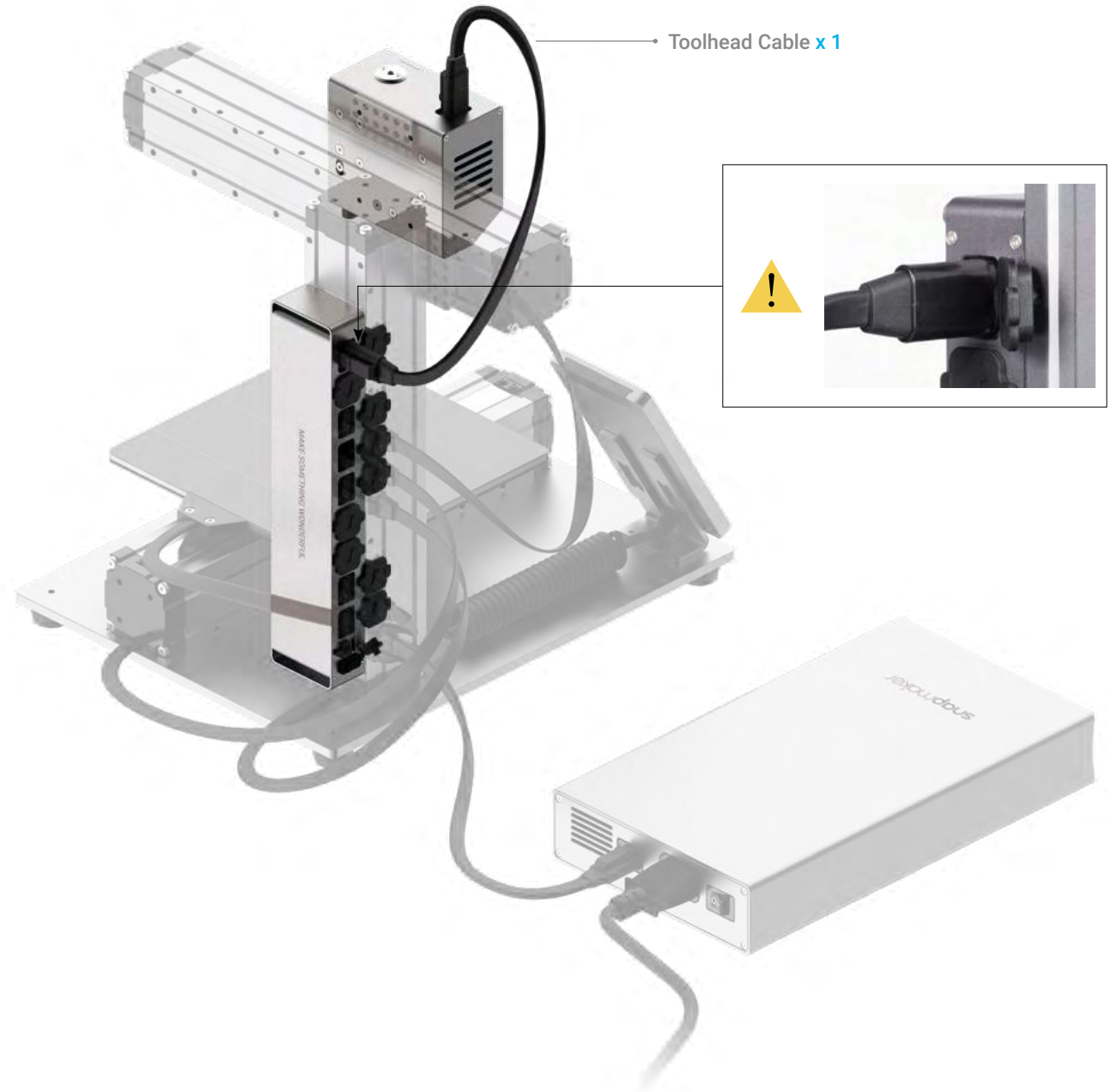

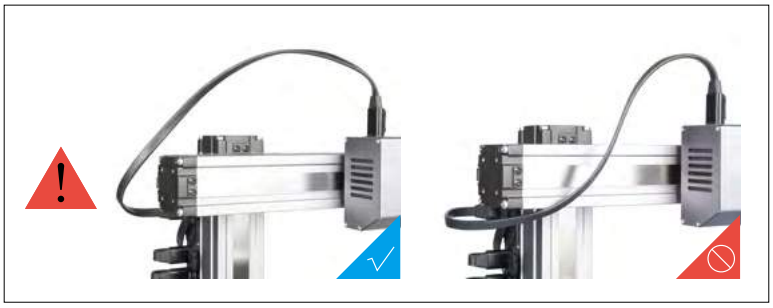

03/04

Attach the Filament Holder to the Z axis.

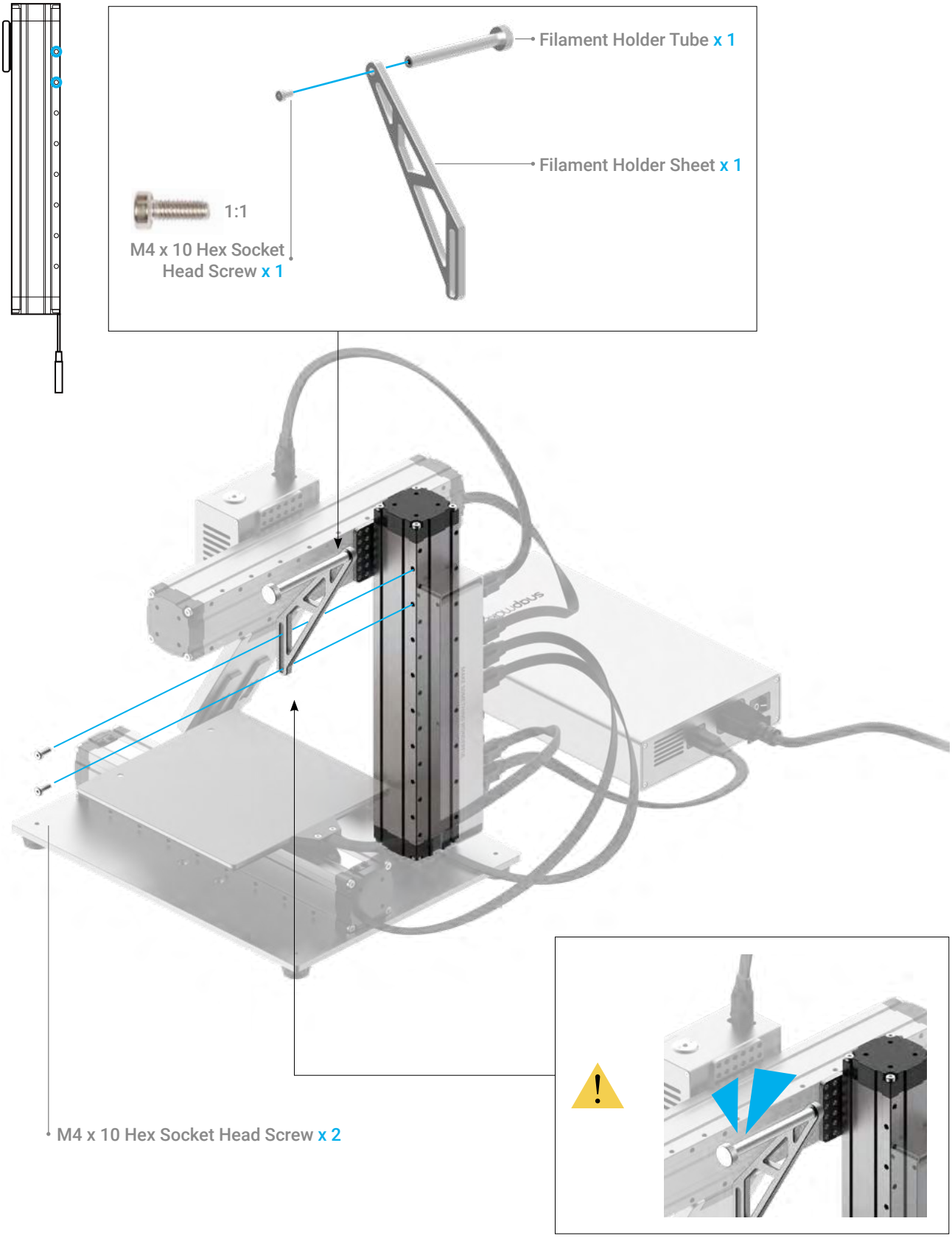

04/04

Place the Print Sheet.

Make sure the Heated Bed is contamination-free before you place the Print Sheet.

Make sure the Print Sheet aligns perfectly with the Heated Bed.

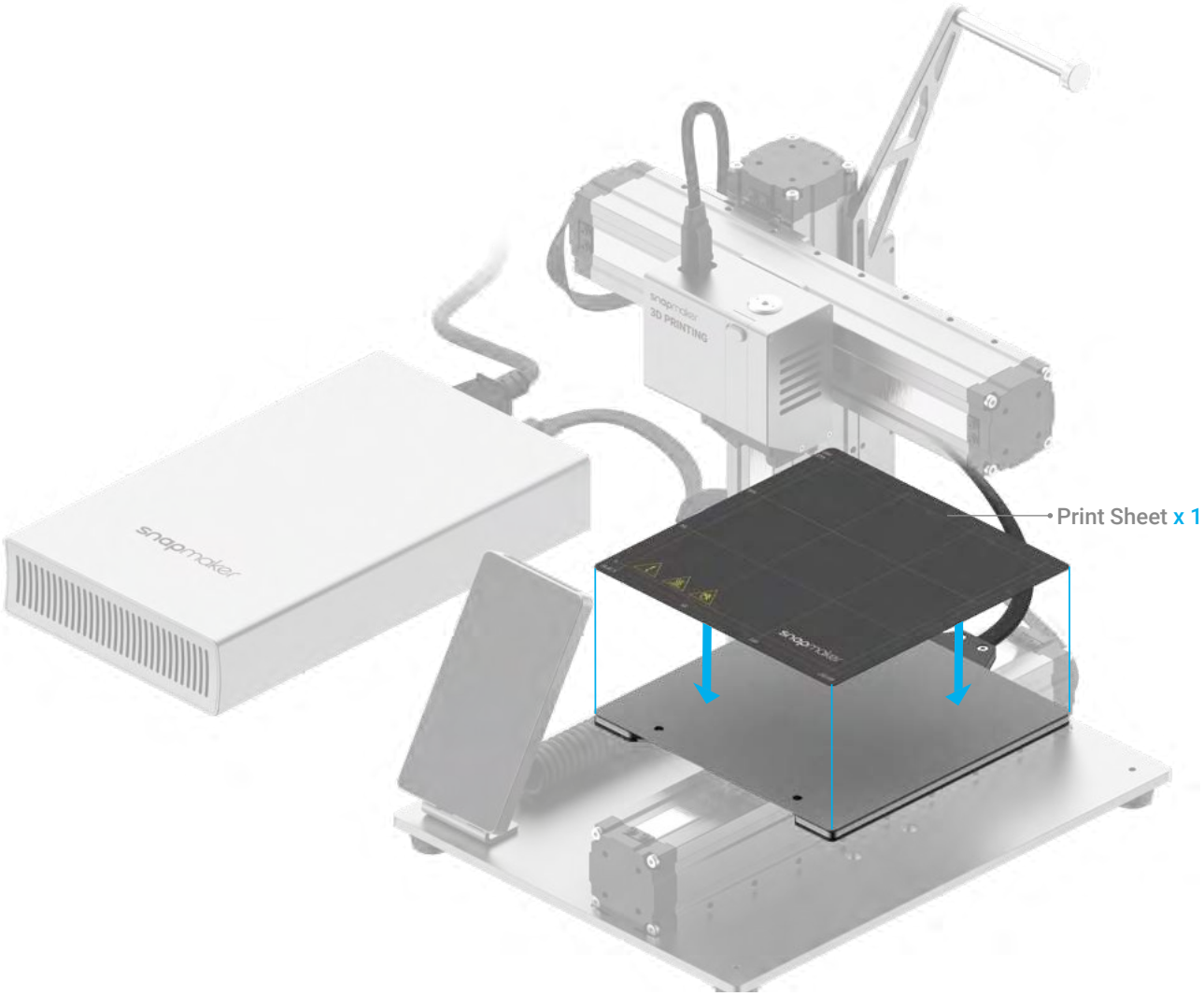

3.1.2 Initial Setup

Guides & Pictures / Snapmaker

Plug the AC Power Cable into an electrical outlet. Switch the power on and follow the prompts on the touchscreen: Read the Terms -> Name the Machine -> Connect to a Wi-Fi Network.

It is recommended to wait for 5 seconds after you restart your machine.

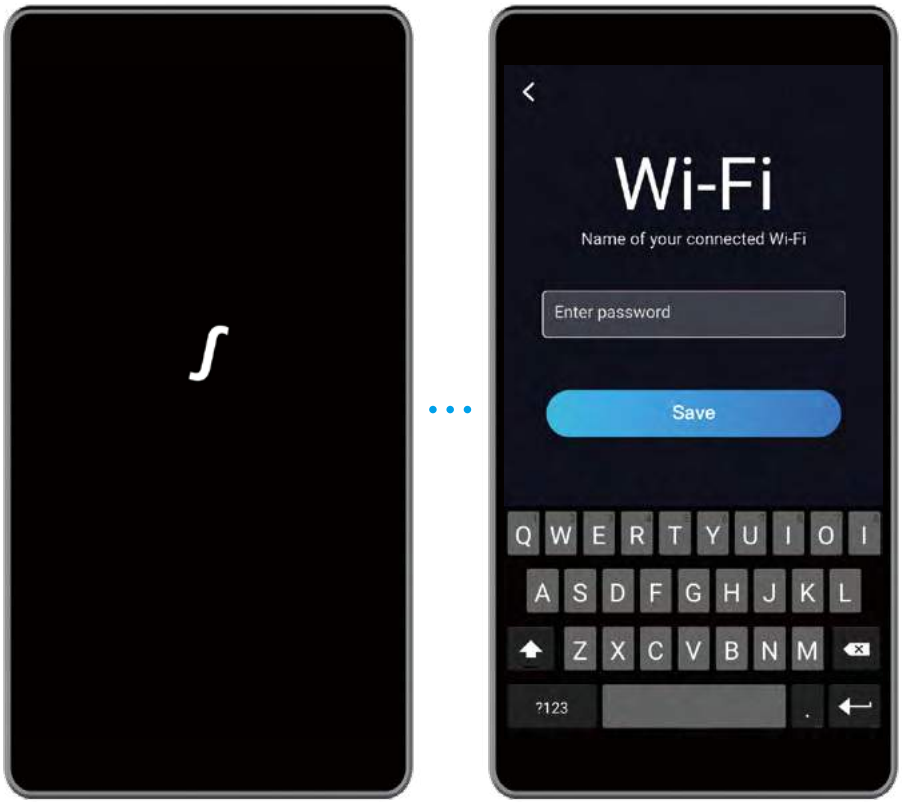

Skip this step if you have completed the initial setup. If you need to change the settings above, swipe left on the homepage of the Touchscreen -> select **Settings** -> tap **Wi-Fi** or **About Machine** as needed.

The initial guide, which helps you get started, will appear only once. If you need to launch it again, swipe left on the homepage of the Touchscreen -> select **Settings** -> tap **Guides**.

3.2.1 Calibrate the Bed

Guides & Pictures / Snapmaker

How It Works: Auto Leveling

The 3D Printing Module conducts a leveling procedure, with the sensor measuring the distance between the nozzle and the Heated Bed at specific points. The movements of the extruder are adjusted to ensure that the nozzle and the Heated Bed are at an optimum distance throughout the printing process.

How It Works: Adjusting the Z Offset

Z Offset is the distance between the tip of the nozzle and the print surface. Adjusting the Z Offset is the process of tweaking the height of the nozzle by tiny increments. A proper Z Offset value helps ensure the first layer of your print sticks to the Print Sheet.

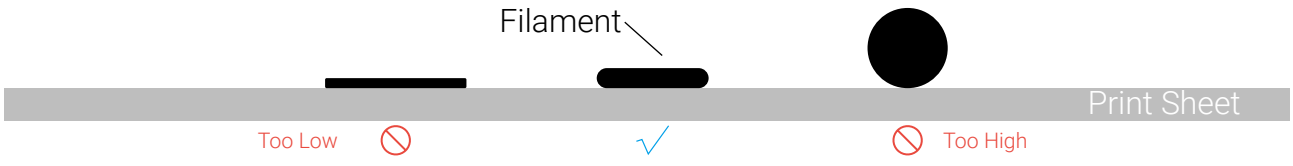

How to Level

1. Run the Auto Leveling procedure on the touchscreen.

2. Place the Calibration Card or a piece of A4 paper between the nozzle and the Heated Bed, and manually calibrate the Z Offset for the last point.

3. Keep adjusting the height of the nozzle using **Up** and **Down** buttons, until you feel slight resistance when you pull out the Calibration Card, and it should be wrinkled when you push it forward. Tap **Save** to save the calibration settings.

Slight Resistance

Wrinkled Calibration Card

3.2.2 Load Filament

Guides & Pictures / Snapmaker

How It Works: Filament Loading

The motor drives the filament into the extruderr, where the filament extrudes through the nozzle after being heated by the heated block.

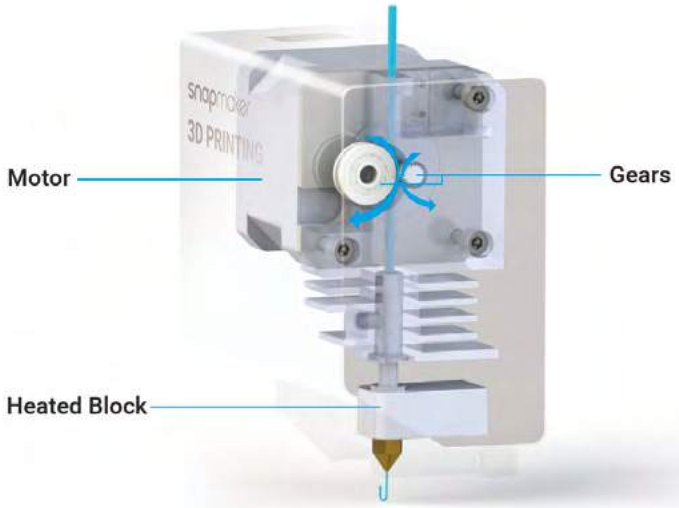

How to Load Filament

1. Hang the provided PLA filament over the Filament Holder. Cut the bending end of the filament using the diagonal pliers, and then insert the filament into the 3D Printing Module.

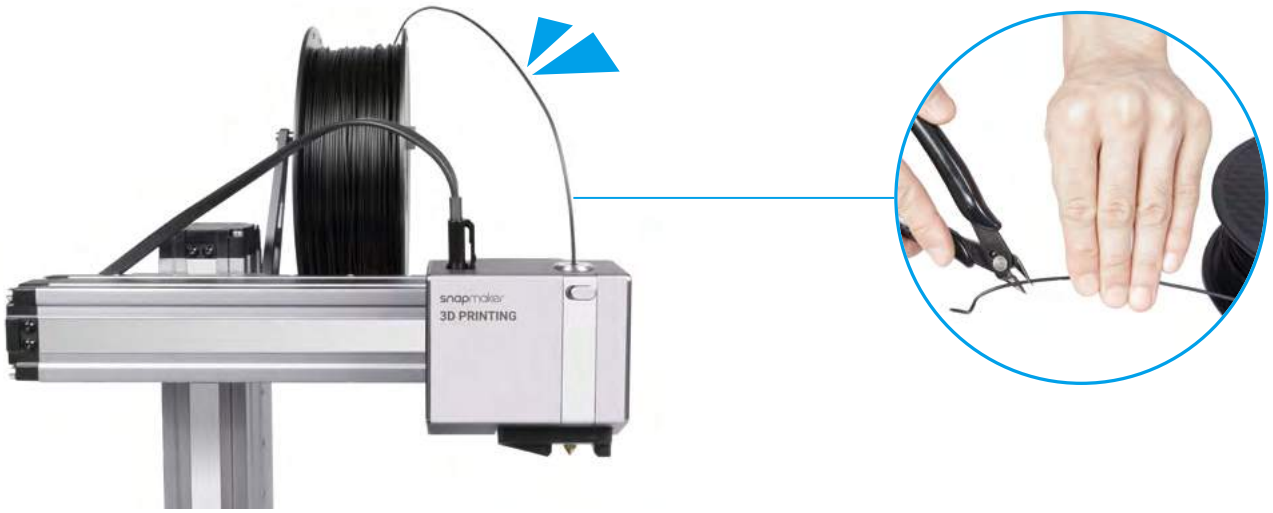

2. Tap **Start** on the **Load Filament** screen. After the temperature reaches the target temperature, tap **Load** and then gently push the filament into the 3D printing module until you can feel the motor pulling the filament in.

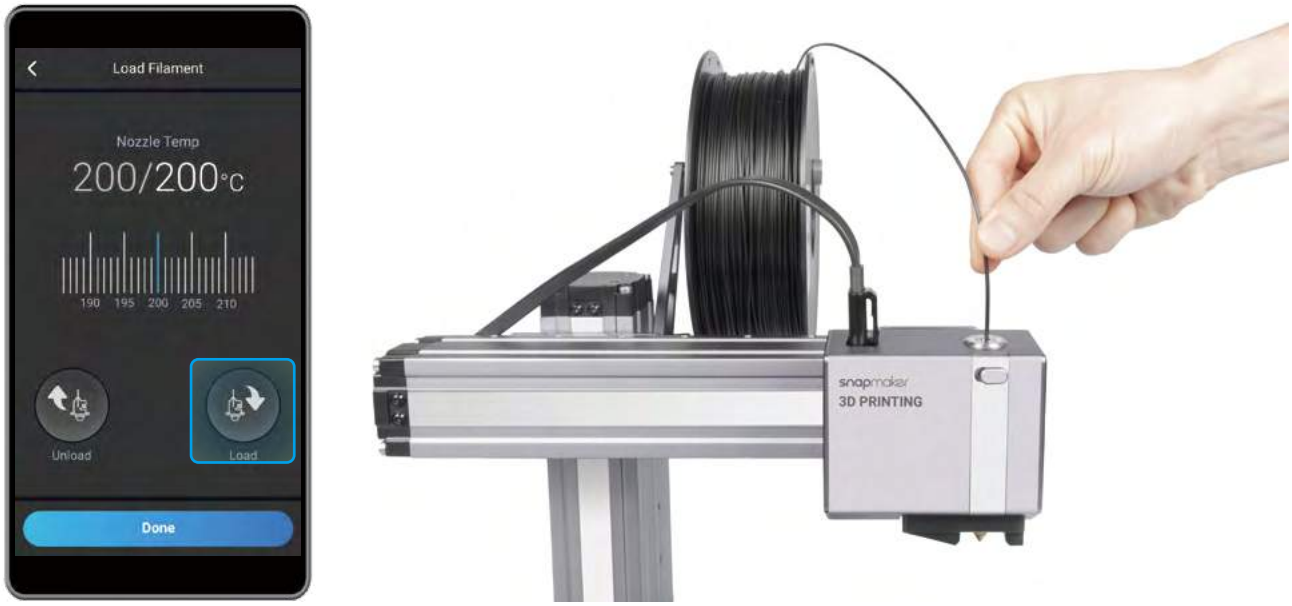

You can change the target **Nozzle Temp** by sliding the scale bar.

3. Clean the nozzle with the tweezers, and tap **Done**.

If no filament is coming out of the nozzle, do not tap **Done** until you repeat the steps above and the filament extrudes successfully.

Congratulations!

You are now ready to print. Please continue to generate the G-code file.

When you need to change the filament, select **Controls** and **Nozzle**. After the temperature reaches the target temperature, tap **Unload** and pull the filament out of the module.

3.3.1 Prepare the G-code File

Guides & Pictures / Snapmaker

1. Install the Software and Complete the Initial Setup

Download our software the Snapmaker Luban at https://www.snapmaker.com/download and install. Then connect to a Wi-Fi network: Enter the **Workspace** -> **Connection** -> Select **Wi-Fi** -> Click -> Select your machine -> Click **Open** -> Tap **Yes** on the Touchscreen.

2. Generate the G-code File and Send It to the Machine

① Load the test file -> ② Use the default settings specifically configured for the test file -> ③ Generate the G-code file -> ④ Load G-code to Workspace -> ⑤ Send G-code to the machine via Wi-Fi.

> You can also upload your own files by clicking **Open File** and configure the file settings. For detailed instructions, refer to our online User Manual.

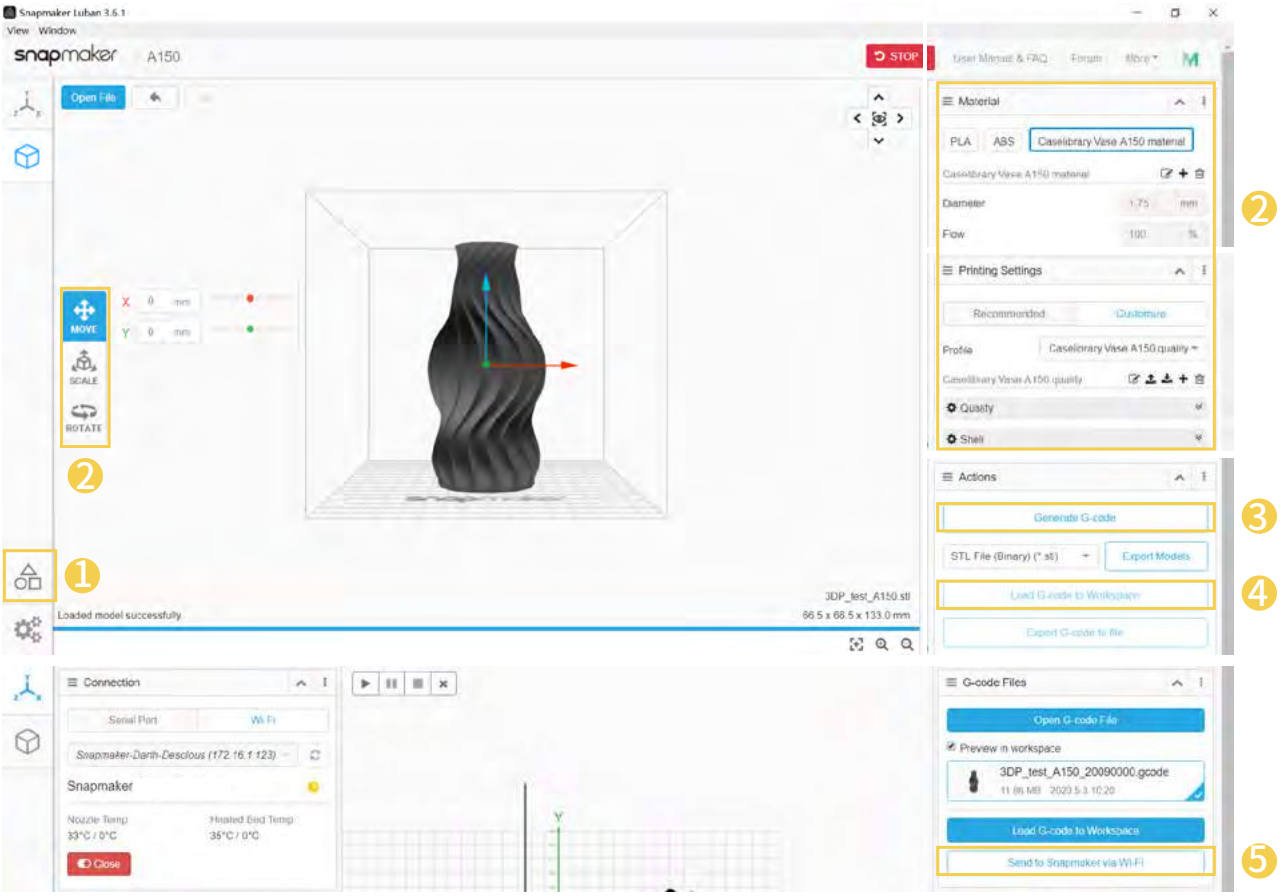

> Files sent by Wi-Fi can be found on the Touchscreen: **Files** > **Local**.

> You can also send the G-code files to the machine via the USB disk. Click **Export G-code to file** in the Snapmaker Luban and save it to the USB disk. Then insert the USB disk into the Controller and select **Files** > **USB** on the Touchscreen.

3.3.2 Start Your First Print

Guides & Pictures / Snapmaker

After receiving the G-code file, tap **Yes** and **Start** on the Touchscreen to start printing. The first layer of the print is key to print success. To prevent damage we recommend that you keep an eye on your print, especially while the first layer is being laid out.

> **If you need to adjust settings, you can either tap Adjust Settings prior to printing or swipe left on the printing progress screen.**

If poor adhesion occurs, swipe left on the printing progress screen and try adjusting the Z Offset. Or you can try leveling the Heated Bed again by selecting **Calibration**. Make sure the tip of the nozzle is clean before you calibrate the bed.

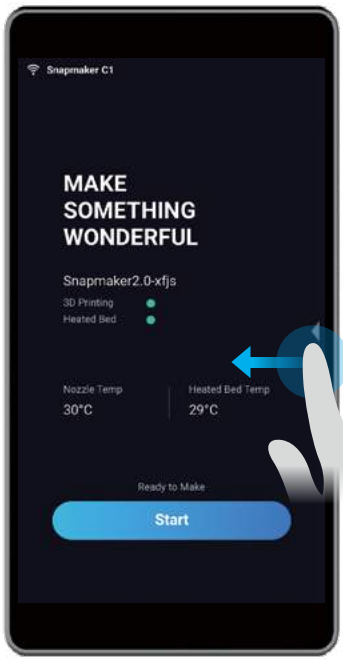

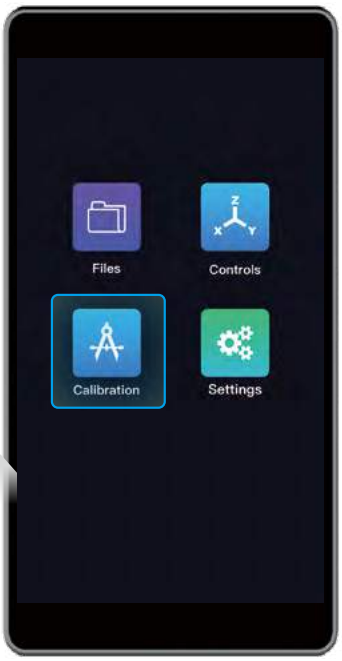

3.3.3 Remove the Print

Guides & Pictures / Snapmaker

Wait for the temperatures of the nozzle and the Heated Bed to drop to room temperature (displayed on the Touchscreen) . Remove the Print Sheet from the Heated Bed and bend it slightly.

The nozzle and the Heated Bed are still extremely hot right after printing.

Remove the print sheet from the Heated Bed, place it down on a stable and flat surface. You can also use the palette knife to remove the print.

The palette knife is sharp.

Filament Runout Recovery & Power-Loss Recovery

Your printer supports filament runout recovery and power-loss recovery, so there is no need to worry about resuming printing anymore! When the filament runs out, tap **Ready to Load** and load new filament to resume printing. In case of power-loss, tap **Recover** to resume printing after the power has been restored.

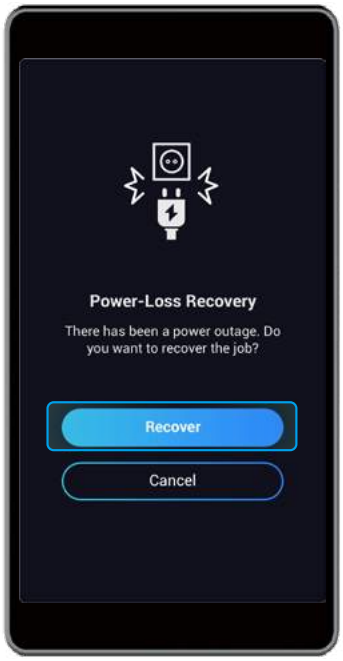

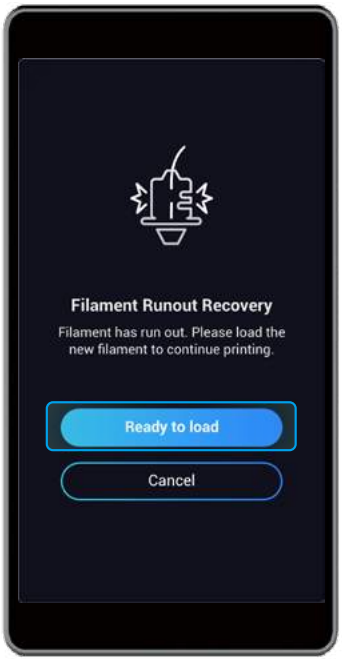

Share!

Share your prints in our Facebook group and our forum.

snapmaker
LASER 1600mW
MAKE
SOMETHING
WONDERFUL
Start

Laser Engraving and Cutting

4.1 Assembly

4.1.1 Assemble the Laser Engraver and Cutter

4.1.2 Initial Setup

4.2 Get Started

4.2.1 Measure the Focal Length

4.2.2 Calibrate the Camera

4.2.3 Fasten the Material

4.3 Prepare the G-code File and Start Cutting

4.1.1 Assemble the Laser Engraver and Cutter

Guides & Pictures / Snapmaker

01/03

Attach the Laser Module to the slider on the X axis.

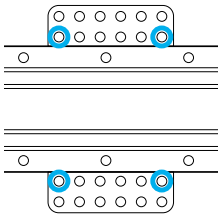

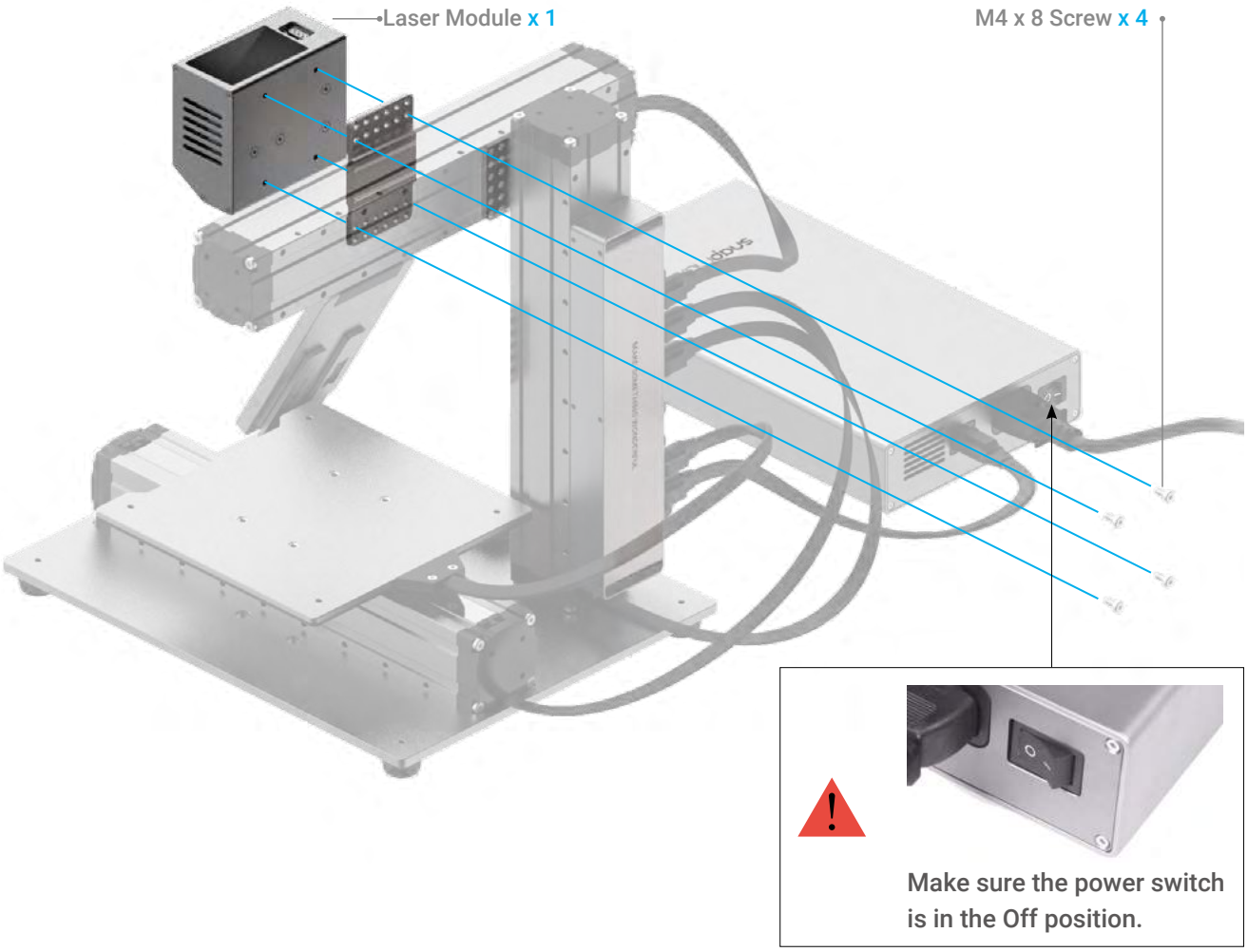

02/03

Connect the Laser Module with the Controller.

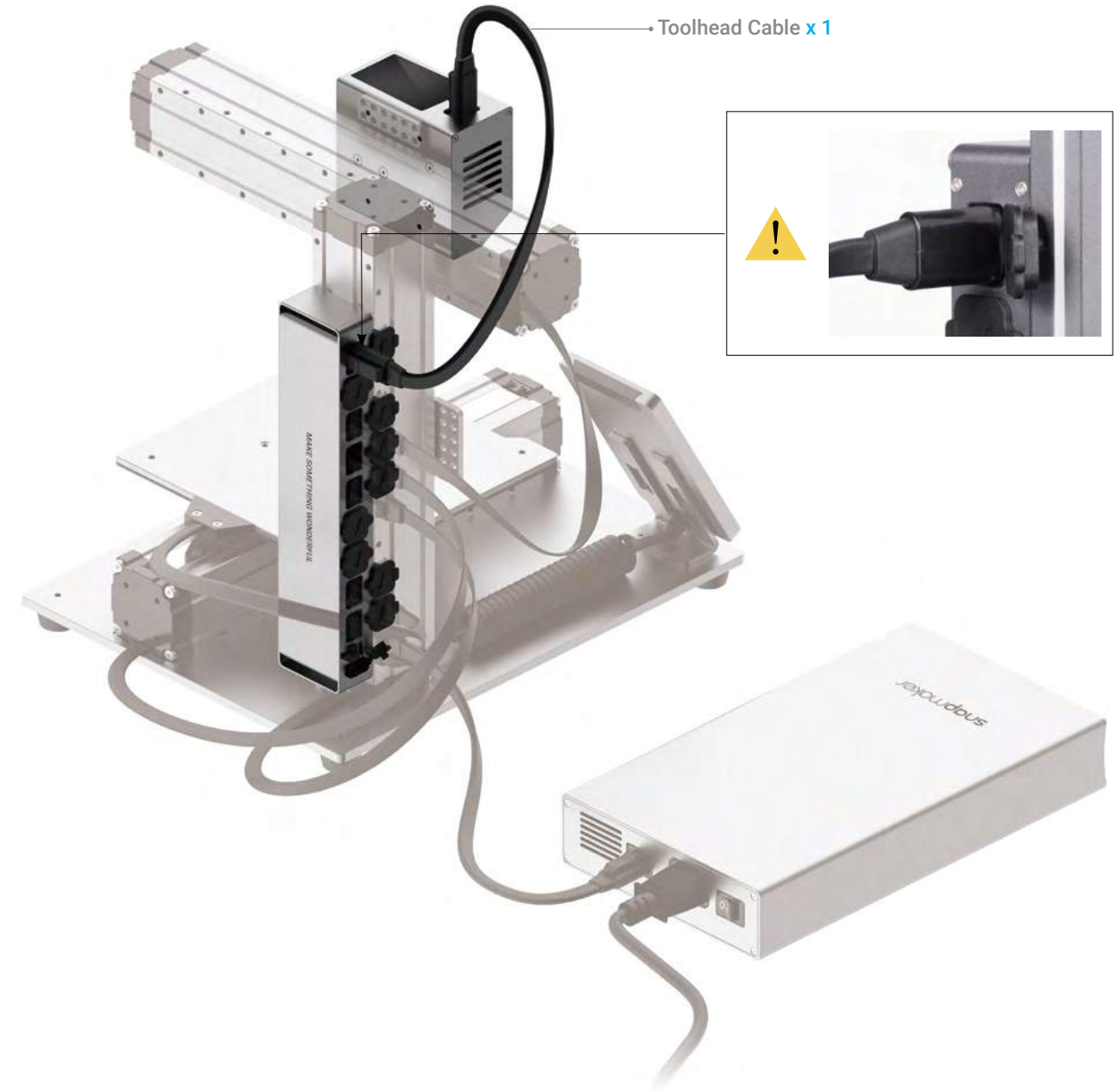

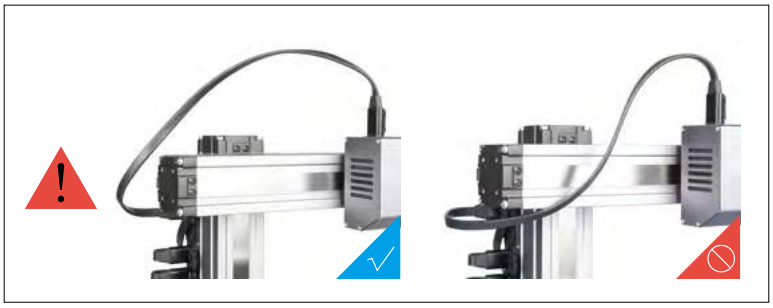

03/03

Attach the Laser Engraving/Cutting Platform to the Platform.

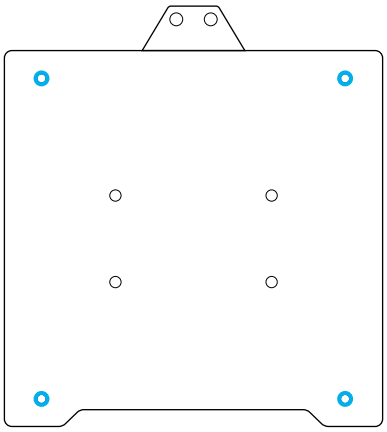

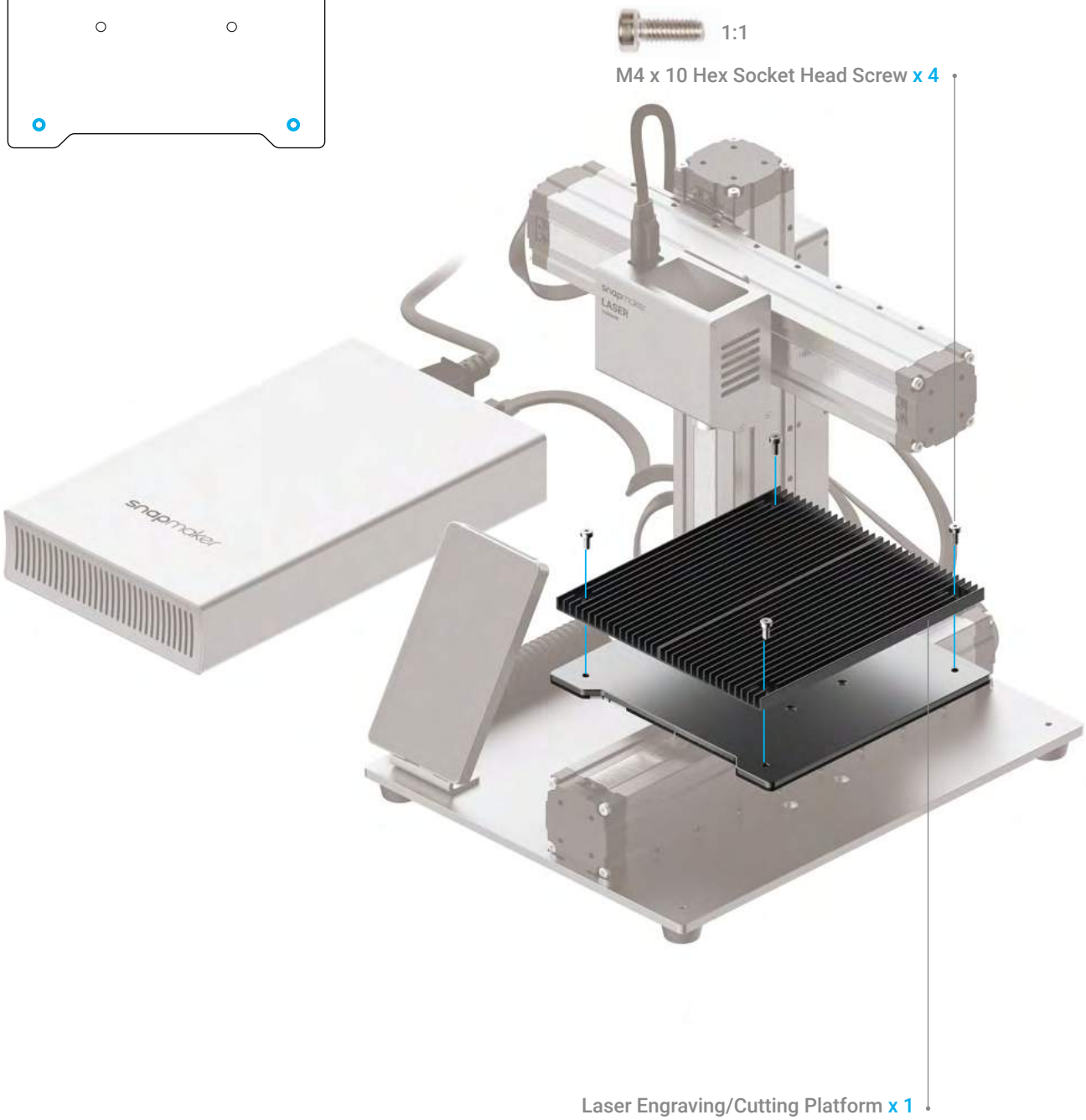

4.1.2 Initial Setup

Plug the AC Power Cable into an electrical outlet. Switch the power on and follow the prompts on the Touchscreen: Read the Terms -> Name the Machine -> Connect to a Wi-Fi Network.

It is recommended to wait for 5 seconds after you restart your machine.

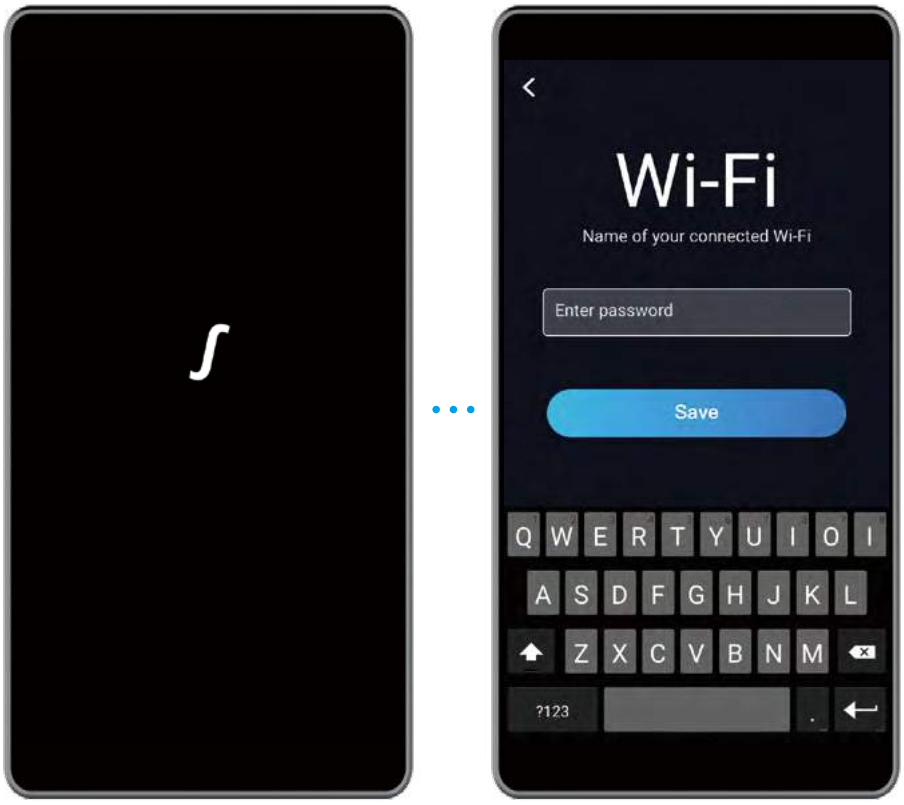

Skip this step if you have completed the initial setup. If you need to change the settings above, swipe left on the homepage of the Touchscreen -> select **Settings** -> tap **Wi-Fi** or **About Machine** as needed.

The initial guide, which helps you get started, will appear only once. If you need to launch it again, swipe left on the homepage of the Touchscreen -> select **Settings** -> tap **Guides**.

4.2.1 Measure the Focal Length

Guides & Pictures / Snapmaker

How It Works: Focal Point

The best focusing result can only be achieved when the Focal Point is right on the surface of the material throughout engraving or cutting.

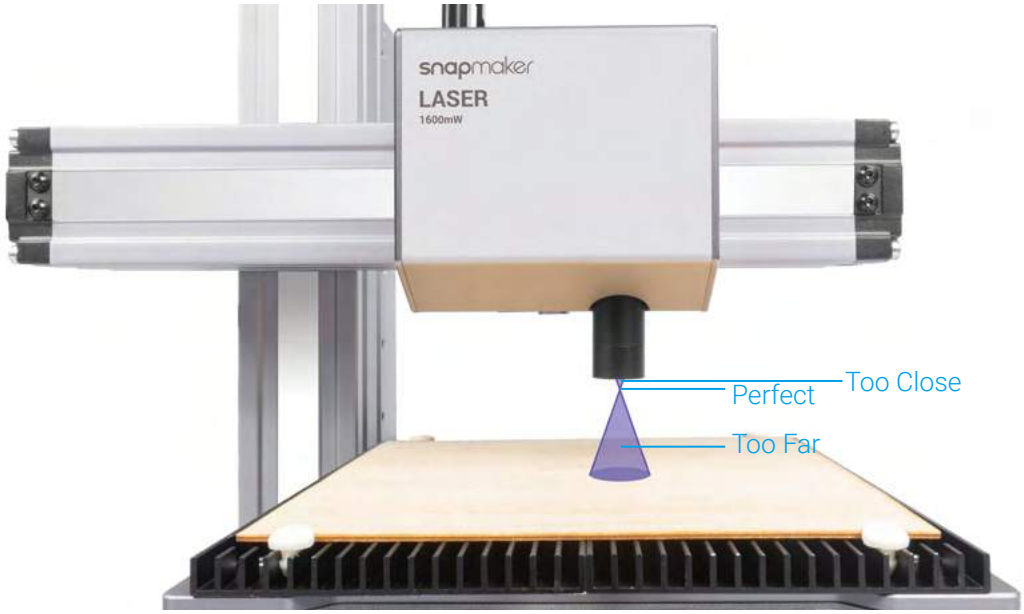

How It Works: Focal Length

The machine engraves a few lines at different heights, and identifies optimal distance between the Laser Module and the material surface. This optimal distance will be used as focal length. You only need to set the thicknesses of different materials on the Touchscreen, and the machine will automatically adjust itself to ensure that the focal length is consistent.

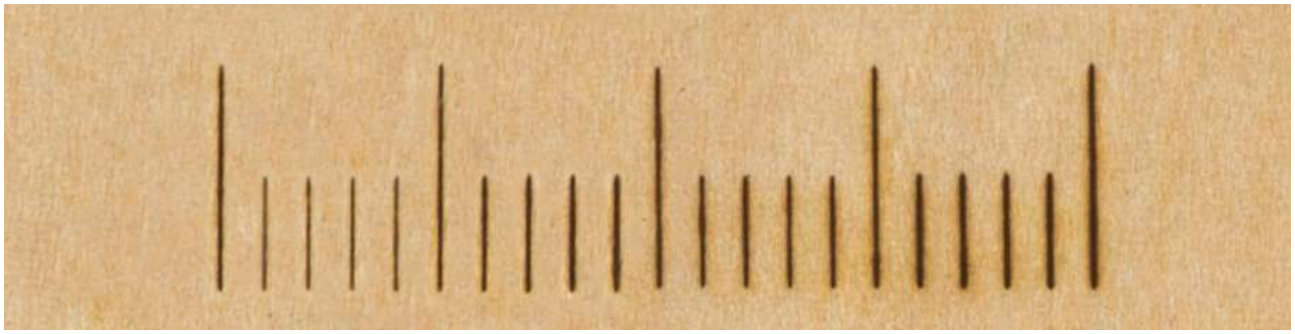

How It Works: Work Origin

Find out where the engraving/cutting will take place by setting the Work Origin. The Work Origin corresponds to the (0, 0) coordinate origin in the software.

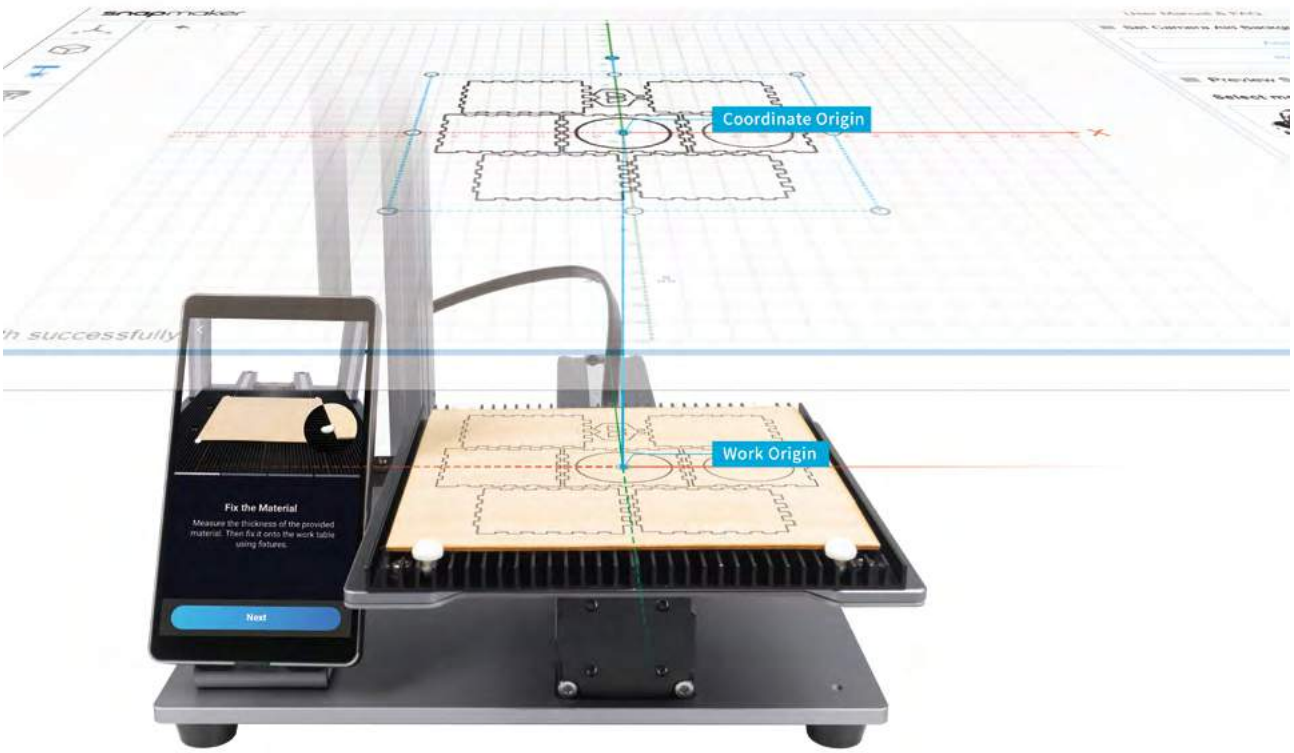

How to Measure the Focal Length

1. Place the provided material on the Laser Engraving/Cutting Platform. Secure it with the silicone plugs.

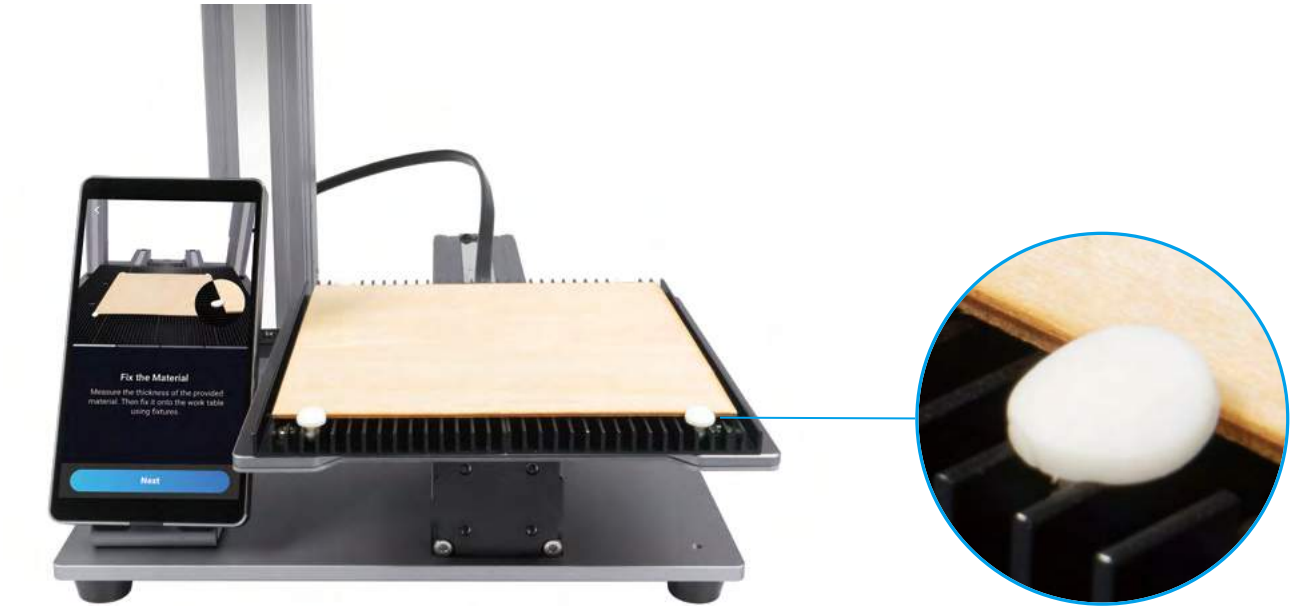

2. Set the thickness of the material (1.5 mm) and tap **Save**.

3. Tap **X-**, **X+**, **Y-**, **Y+**, **Z-**, or **Z+** to move the Laser Module. After the laser camera shade has slightly touched the surface of the material, tap **Next**. Put on the Laser Safety Goggles before setting the Work Origin.

4. Tap **X-**, **X+**, **Y-**, or **Y+** to move the laser dot to where the Work Origin will be, and then tap **Set Work Origin** and **Run Boundary** to check if the work origin is proper. If not, reset the Work Origin and run boundary again.

If the Laser Module runs into any portions of the machine, turn off the machine immediately.

5. Tap **Start**, and the machine will auto focus.

Should you need to remeasure the focal length, refer to our online User Manual for detailed instructions.

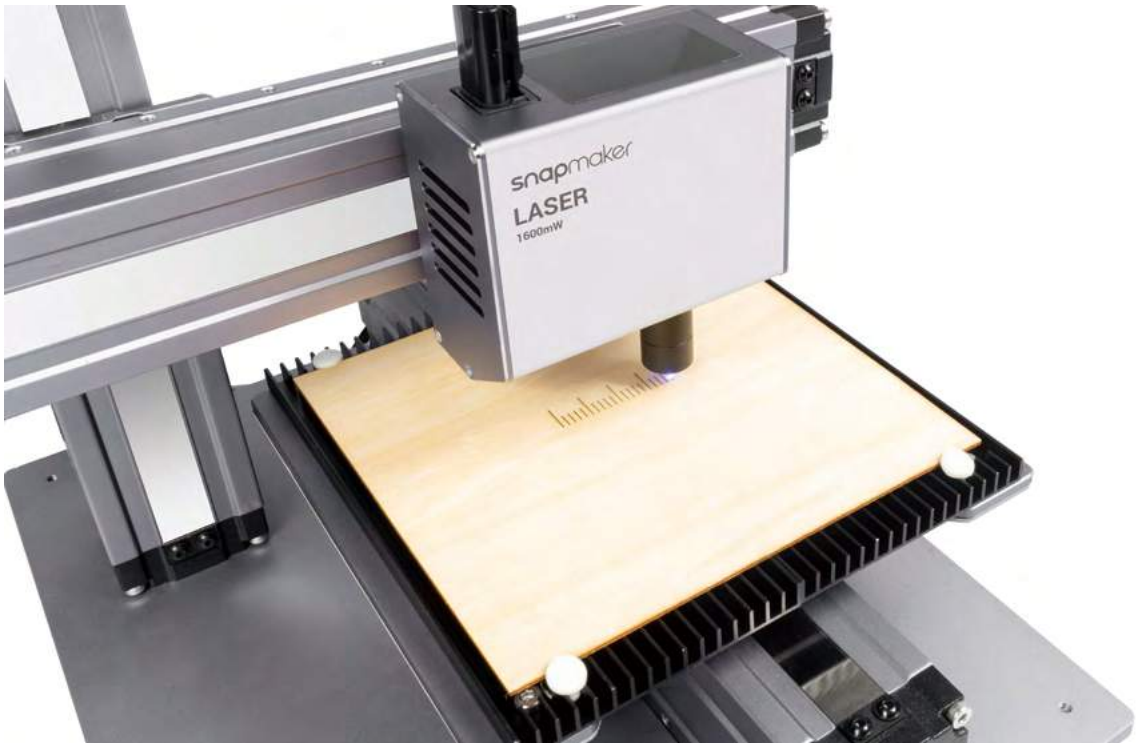

4.2.2 Calibrate the Camera

Guides & Pictures / Snapmaker

1. Remove the engraved material. Place a piece of blank white paper (no less than 150 mm x 150 mm) on the center of the Laser Engraving/Cutting Platform, and fasten it.

2. Tap **Start**, and the machine will use the engraved square to calibrate the camera.

> **If you have detached the Laser Module from the X axis, or if you have reassembled the machine, please recalibrate the camera: Swipe left on the homepage of the Touchscreen -> select Settings -> tap Laser -> tap Camera Calibration.**

4.2.3 Fasten the Material

Remove the engraved paper, and then fasten another provided material on the center of the Laser Engraving/ Cutting Platform.

You can also fasten materials using other tools.

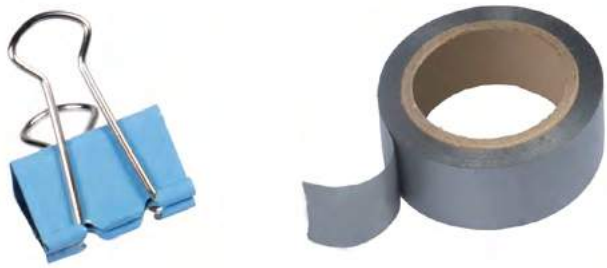

If you need to fasten thick materials, refer to **5.2.1 Fasten the Material.**

Make sure the clamp set will not collide with any portions of the machine.

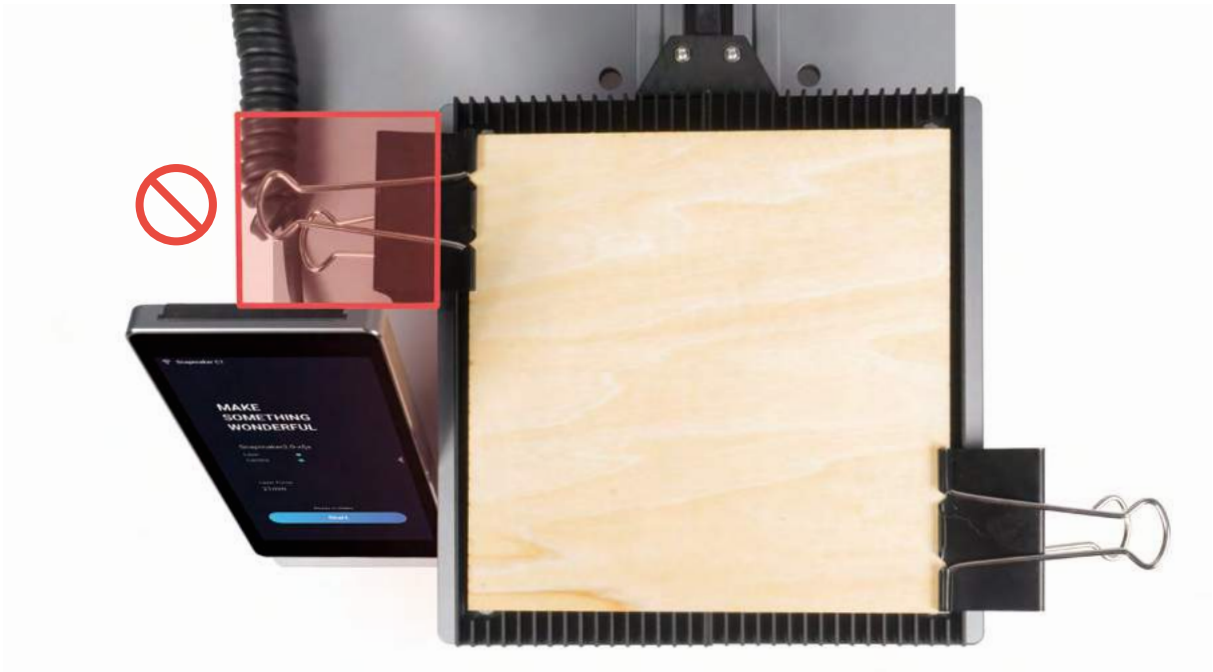

4.3 Prepare the G-code File and Start Cutting

Guides & Pictures / Snapmaker

1. Download our software the Snapmaker Luban at https://www.snapmaker.com/download and install. Then connect to a Wi-Fi network: Enter the **Workspace** -> **Connection** -> Select **Wi-Fi** -> Click -> Select your machine -> Click **Open** -> Tap **Yes** on the Touchscreen.

2. Click **Camera Capture** in the **Laser G-code Generator** and then click **Start**. Wait for the machine to take photos and stitch them into a panorama of the platform, and click **Confirm**.

If the edges of the captured image are not aligned, click **Calibration** to manually calibrate the camera.

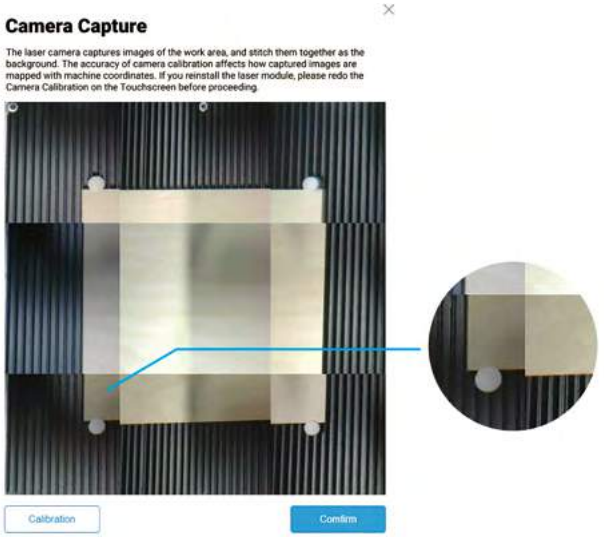

Zoom into the image and move the lines until they perfectly match the square, click **Confirm** -> **Apply** to see the finished image.

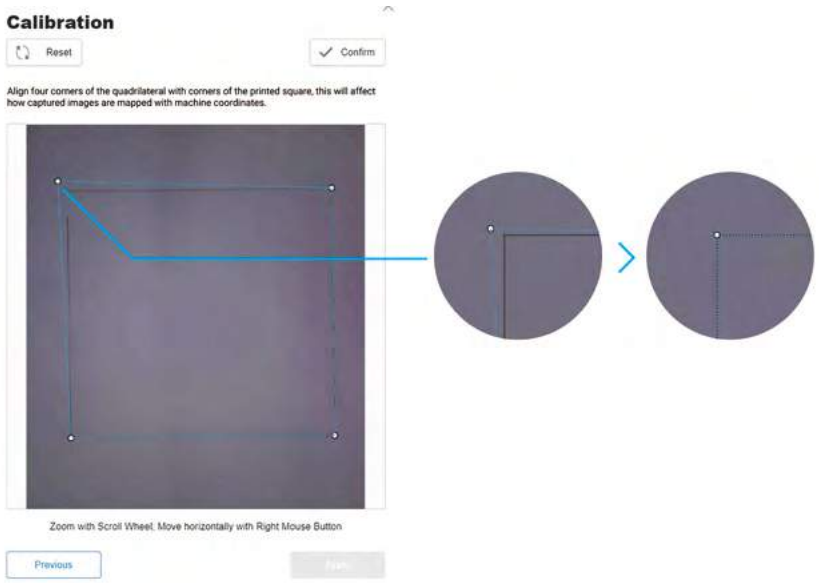

Click **Confirm** and the finished image will be loaded into the quadrant in the coordinate system. You can repeat the steps above if the edges of the captured image are still not aligned.

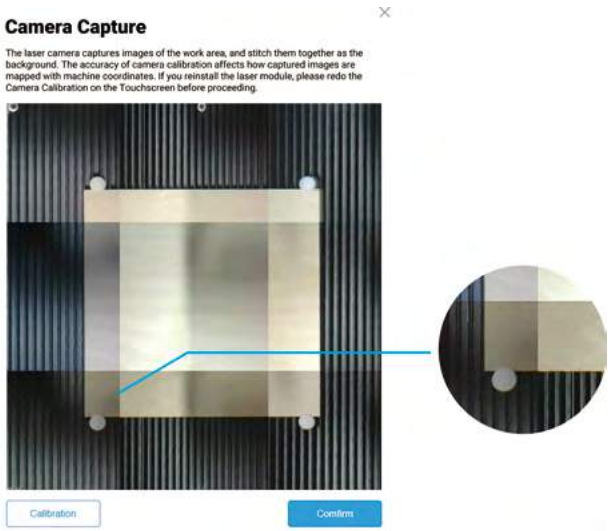

3. ① Open the test file from **Case Library** -> ② Drag the image to where the cutting will take place on the captured platform -> ③ Click **Process** after configuring the settings in **Configurations** section -> ④ Use the default settings specifically configured for the test file -> ⑤ Generate the G-code file -> ⑥ Load G-code to **Workspace** -> ⑦ Set the thickness of the material -> ⑧ Click **Run** ▶ .

> You can also upload your own files by clicking **Open File** in **Editor** and configure the file settings.

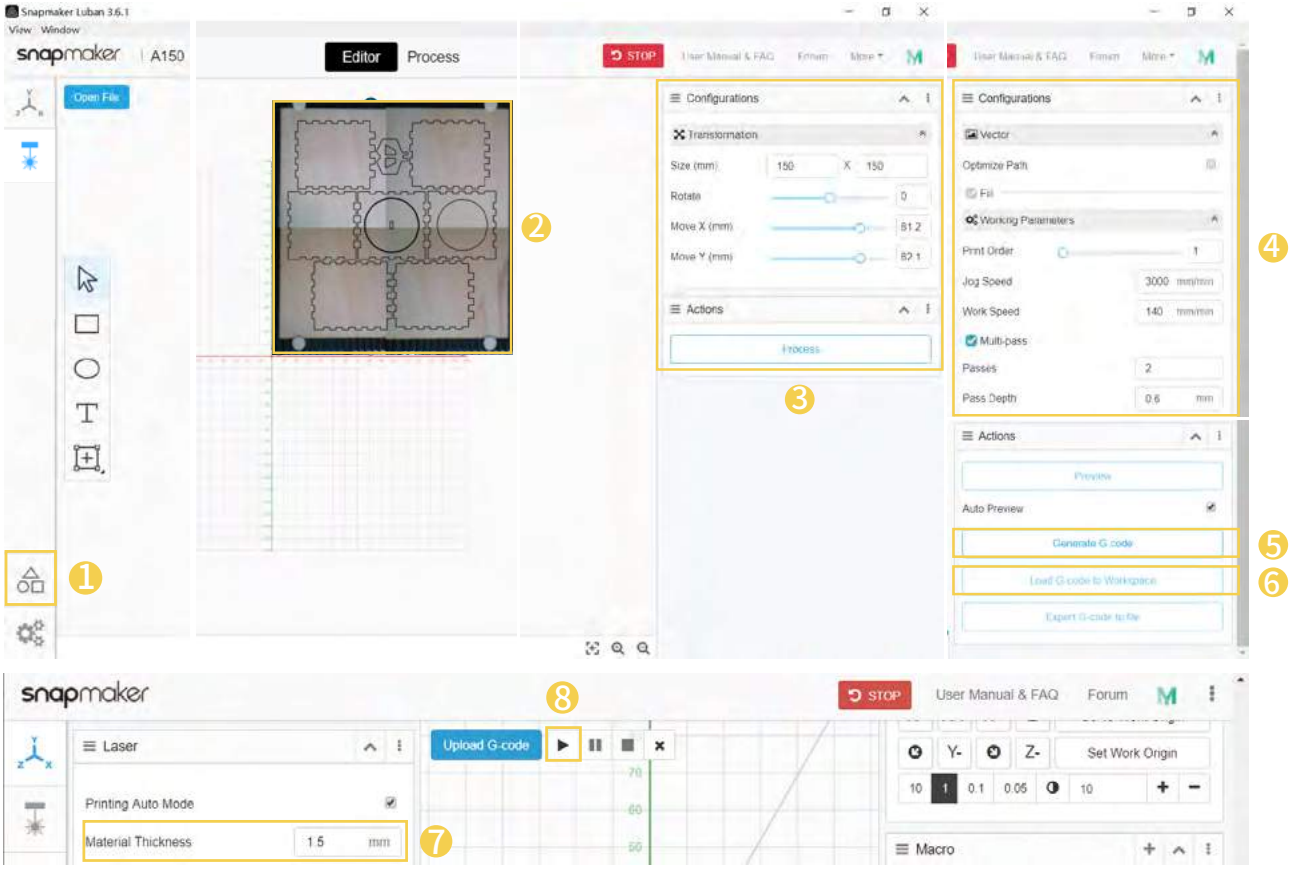

> You can also start engraving/cutting by using the USB disk, connecting with the USB cable, or sending G-code files via Wi-Fi, in which case you will need to set the work origin yourself. For detailed instructions, refer to our online User Manual.

4. Remove the finished work and complete the assembly.

Share!

Share your finished work in our Facebook group and our forum.

snapmaker
CNC
MAKE
SOMETHING
WONDERFUL
Start

CNC Carving

5.1 Assembly

5.1.1 Assemble the CNC Carver

5.1.2 Initial Setup

5.2 Get Started

5.2.1 Fasten the Material

5.2.2 Attach the Bit

5.3 Start Carving

5.3.1 Prepare the G-code File

5.3.2 Set the Work Origin and Start Carving

5.3.3 Clean the Finished Work

5.1.1 Assemble the CNC Carver

Guides & Pictures / Snapmaker

01/03

Attach the CNC Module to the slider on the X axis.

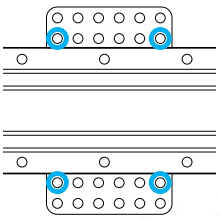

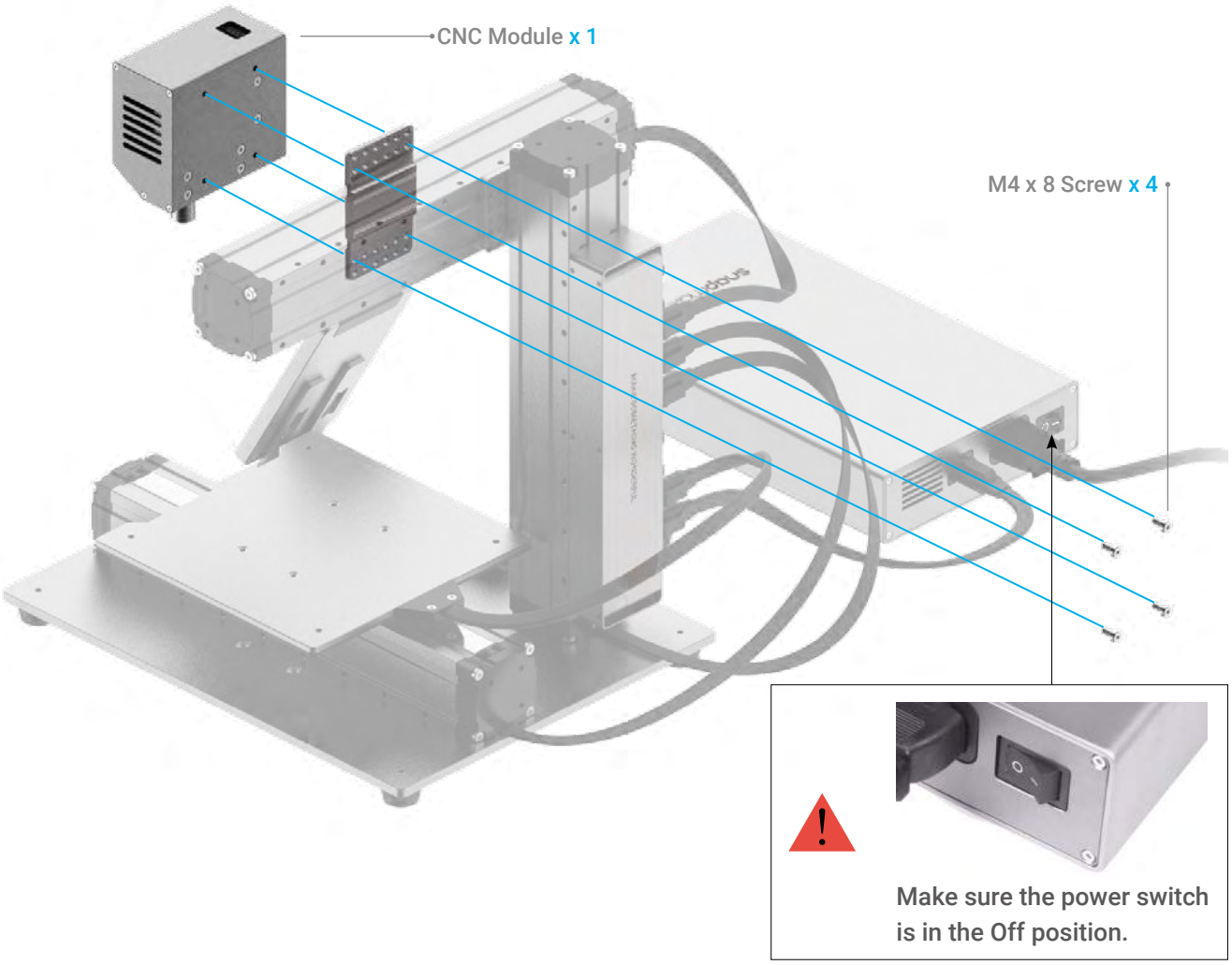

02/03

Connect the CNC Module with the Controller.

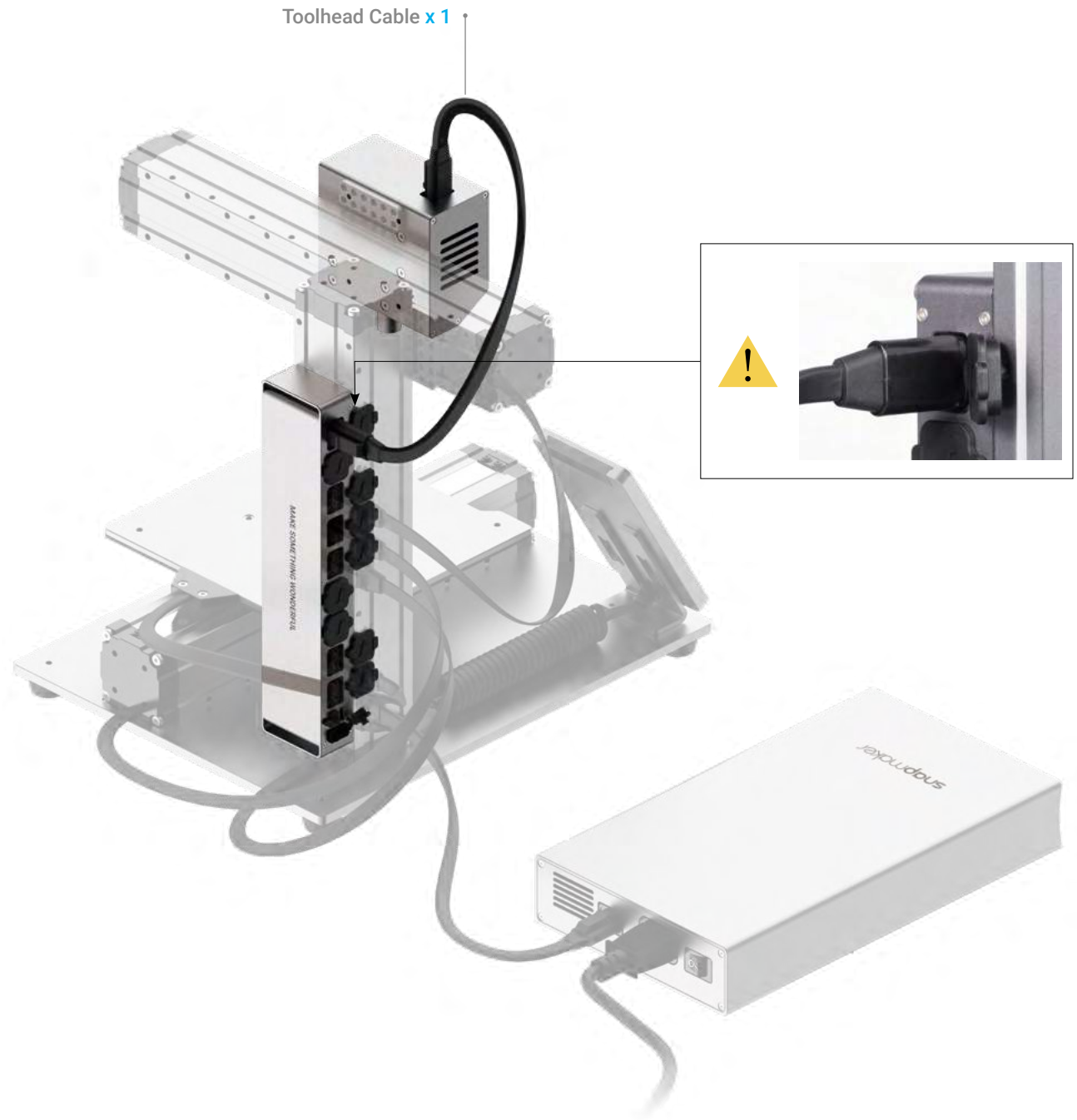

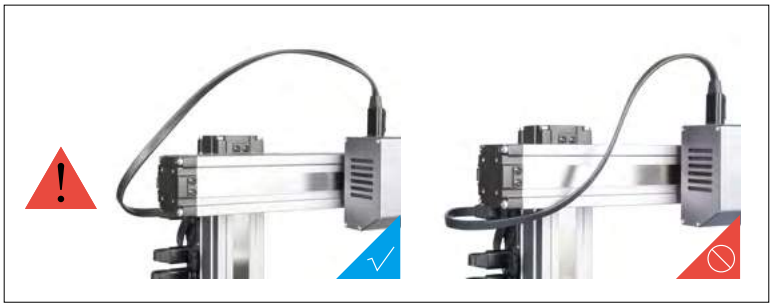

03/03

Attach the CNC Carving Platform to the Platform.

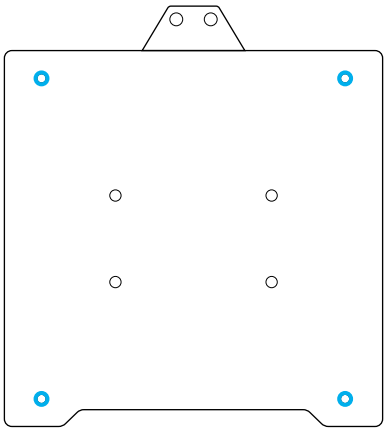

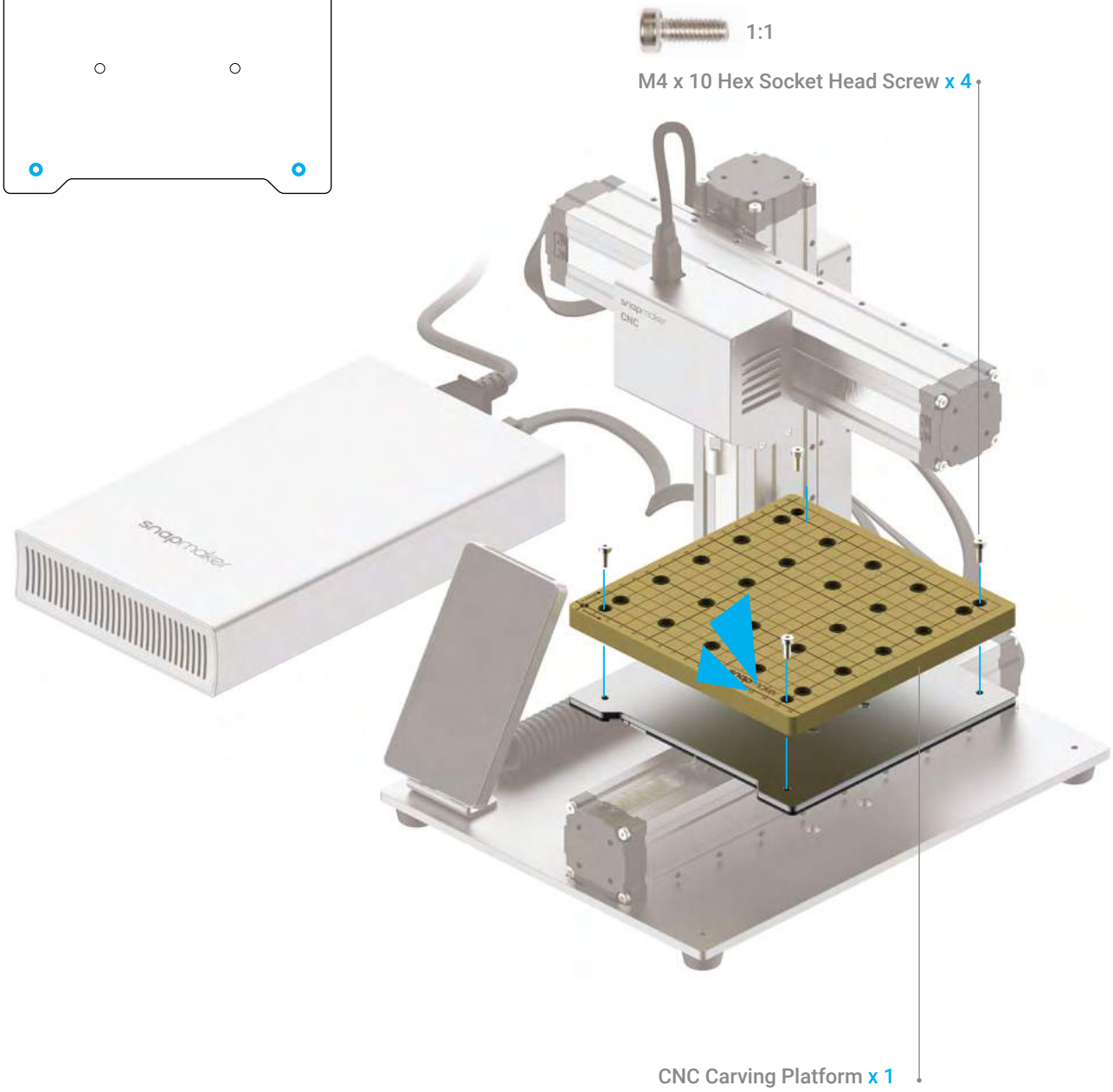

5.1.2 Initial Setup

Plug the AC Power Cable into an electrical outlet. Switch the power on and follow the prompts on the Touchscreen: Read the Terms -> Name the Machine -> Connect to a Wi-Fi Network.

It is recommended to wait for 5 seconds after you restart your machine.

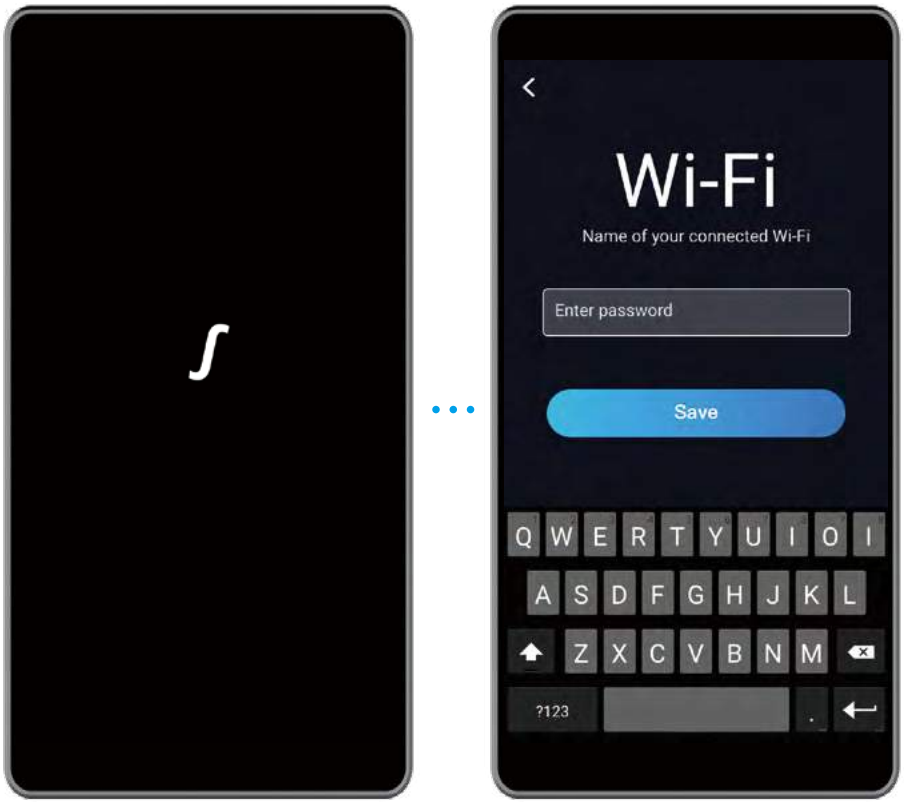

Skip this step if you have completed the initial setup. If you need to change the settings above, swipe left on the homepage of the Touchscreen -> select **Settings** -> tap **Wi-Fi** or **About Machine** as needed.

The initial guide, which helps you get started, will appear only once. If you need to launch it again, swipe left on the homepage of the Touchscreen -> select **Settings** -> tap **Guides**.

5.2.1 Fasten the Material

Guides & Pictures / Snapmaker

1. Place the provided material on the center of the CNC Carving Platform.

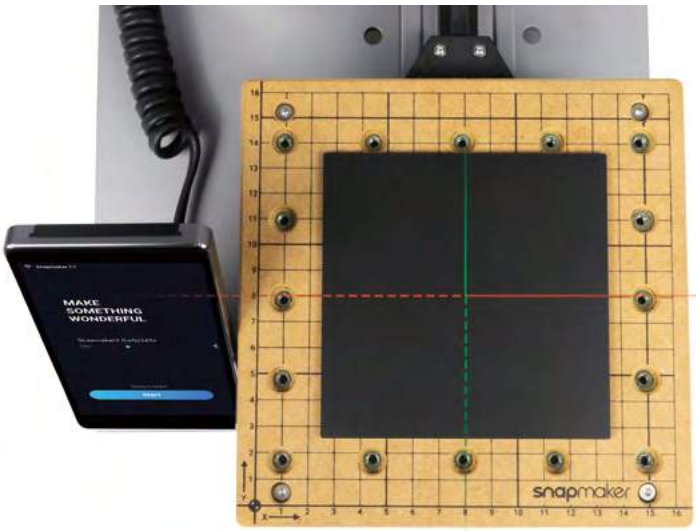

2.Attach the clamp set to the CNC Carving Platform, and then fasten the material by screwing the wing nuts.

> ⚠ **The size of our provided model is 43.8 x 50.2 mm. Make sure the clamp set does not impede the movement of the CNC Bit.**

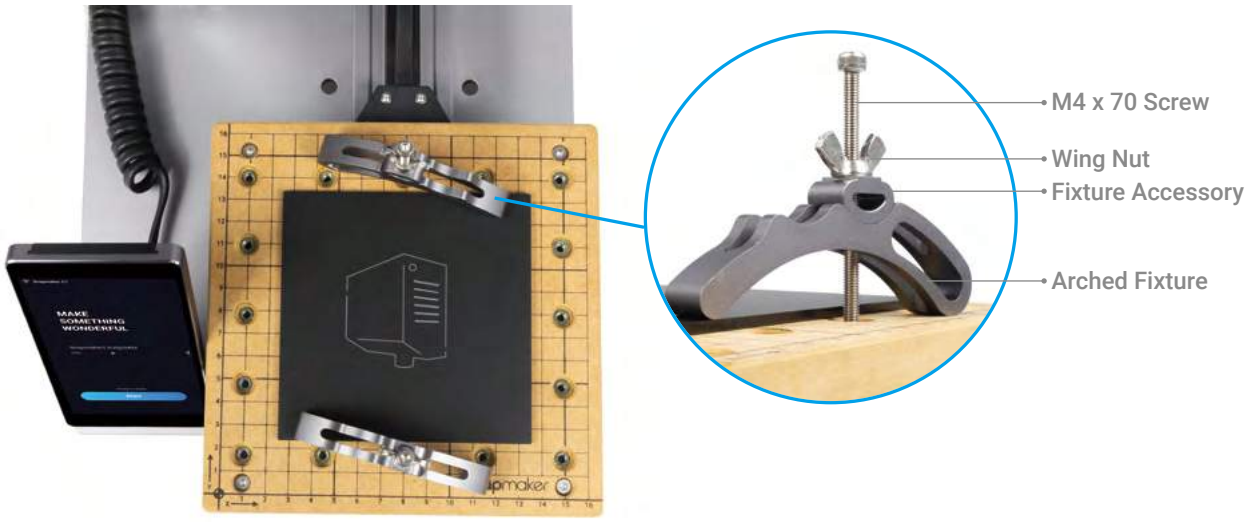

Do not screw the screws all the way down through the CNC Carving Platform.

Make sure the clamp set will not collide with any portions of the machine.

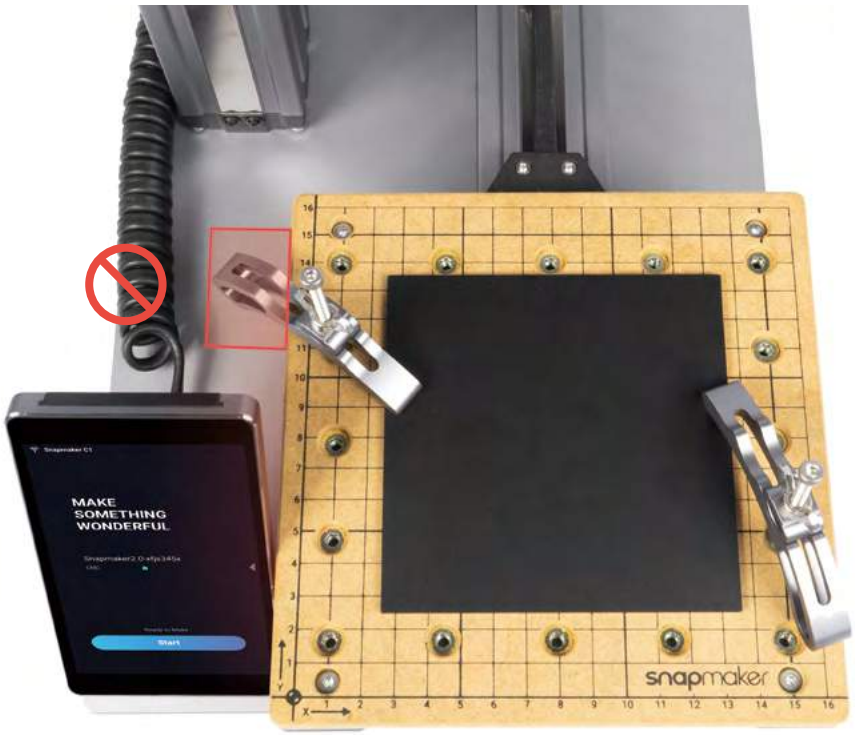

All the three slots as illustrated can be used to fasten the material.

5.2.2 Attach the CNC Bit

Guides & Pictures / Snapmaker

How It Works: CNC Bit Usage

Flat End Mill is typically used for slotting or cutting materials into flat surface.

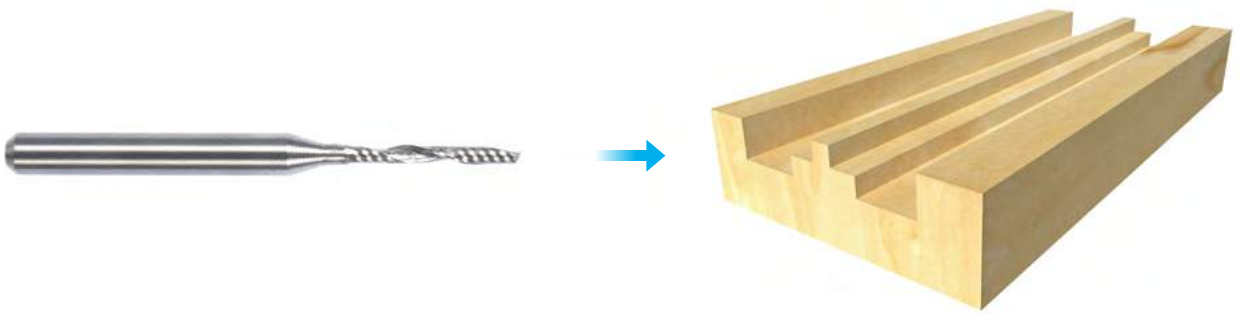

Ball End Mill is typically used for carving materials into curved surface.

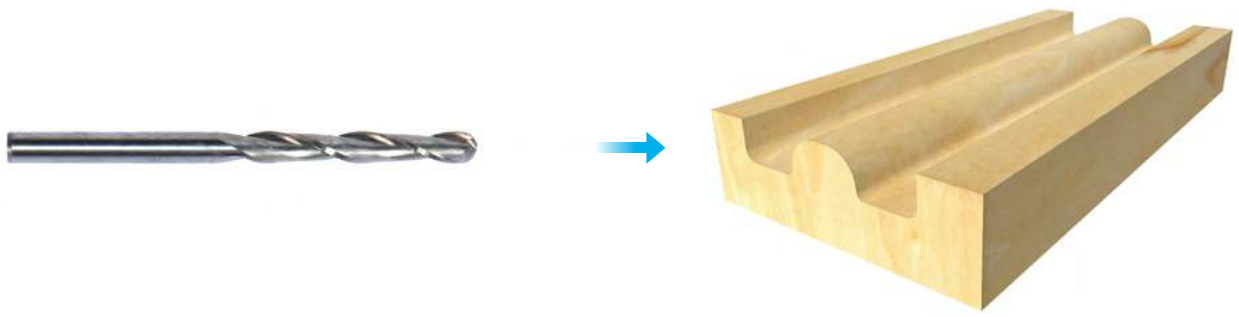

How to Attach the CNC Bit

1. Obliquely insert the ER11 collet into the ER11 nut until it clicks into place.

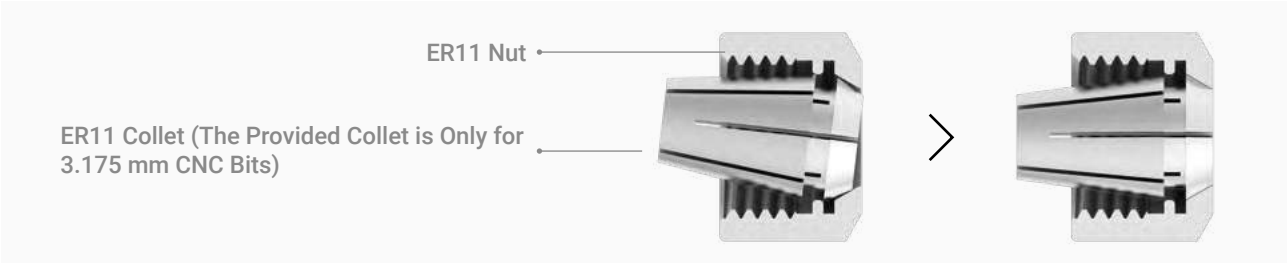

2. 2.Put on the CNC Safety Goggles. Insert the CNC Bit into the ER11 collet (Flat End Mill is required for our provided model). Keep pushing the CNC Bit until its end bottoms against the shell of the ER11 collet.

Handle the CNC Bits carefully and keep them out of reach of children.

3. Twist the entire unit onto the shank as tight as possible, and then completely tighten the ER11 nut using the open-end wrenches.

17 mm Open-End Wrench

14 mm Open-End Wrench

Congratulations!

You are now ready to print. Please continue to generate the G-code file.

5.3.1 Prepare the G-code File

Guides & Pictures / Snapmaker

1. Install the Software and Complete the Initial Setup

Download our software the Snapmaker Luban at https://www.snapmaker.com/download and install. Then connect to a Wi-Fi network: Enter the **Workspace** -> **Connection** -> Select **Wi-Fi** -> Click -> Select your machine -> Click **Open** -> Tap **Yes** on the Touchscreen.

2. Generate the G-code File and Send It to the Machine

① Open the test file from **Case Library** -> ② Click **Process** after configuring the settings in **Configurations** section -> ③ Use the default settings specifically configured for the test file -> ④ Generate the G-code file -> ⑤ Load G-code to **Workspace** -> ⑥ Send G-code to the machine via Wi-Fi.

You can also upload your own files by clicking **Open File** in **Editor** and configure the file settings.

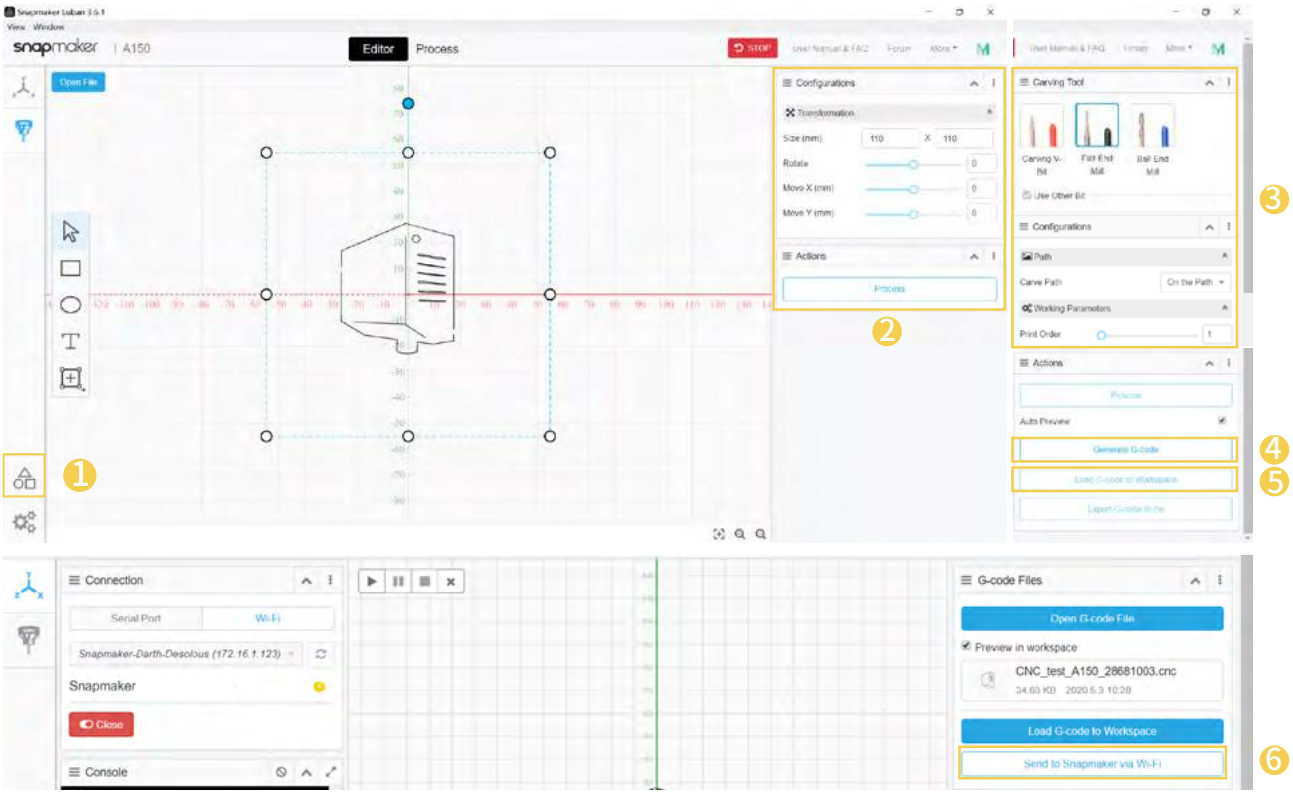

Files sent by Wi-Fi can be found on the Touchscreen: **Files** > **Local**.

You can also send the G-code files to the machine via the USB disk. Click **Export G-code to file** in the Snapmaker Luban and save it to the USB disk, and then insert the USB disk into the Controller and select **Files** > **USB** on the Touchscreen.

5.3.2 Set the Work Origin and Start Carving

Guides & Pictures / Snapmaker

How It Works: Work Origin

Find out where the carving will take place by setting the Work Origin. The Work Origin corresponds to the (0, 0) coordinate origin in the software.

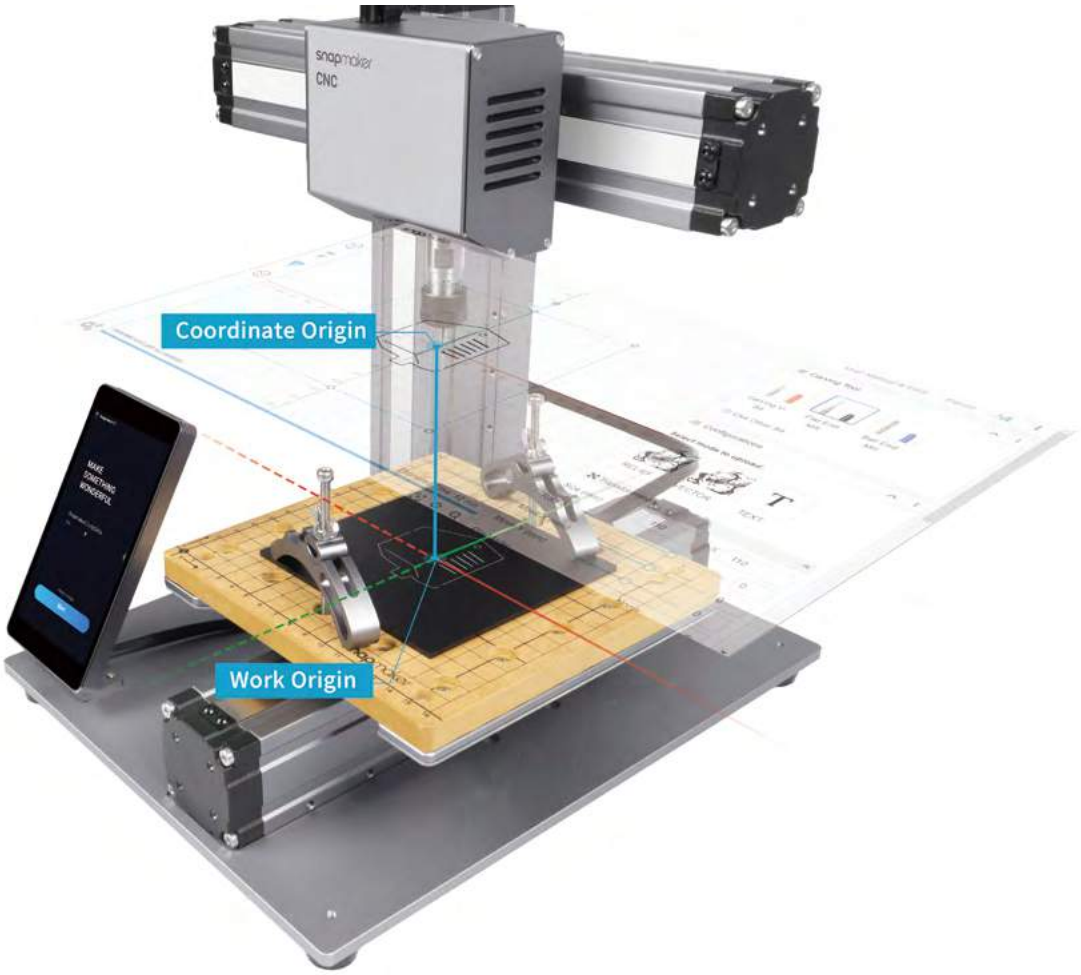

How to Set the Work Origin

1. After receiving the G-code file, tap **Yes** and **Next** on the Touchscreen to enter the **Set Work Origin** screen.

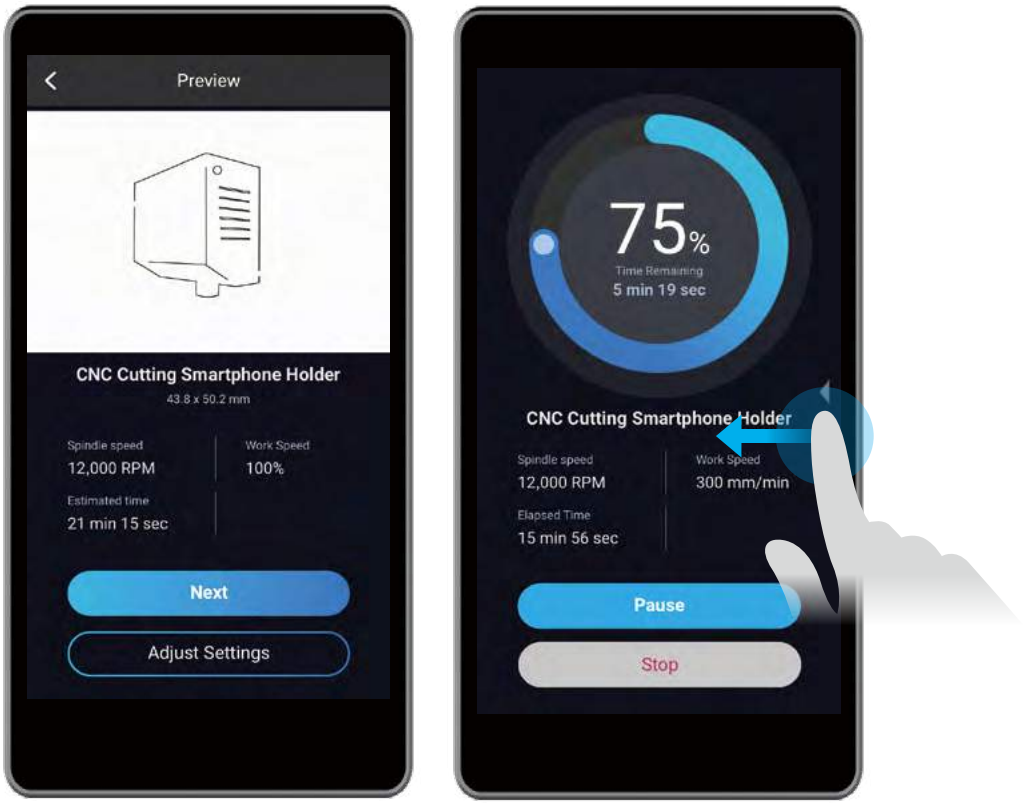

> If you need to adjust settings, you can either tap **Adjust Settings** on the **Preview** screen or swipe left on the carving progress screen.

2. Tap **X-**, **X+**, **Y-**, **Y+**, **Z-**, or **Z+** to move the CNC Bit to where the Work Origin will be (In this case, we set the center of the image as the coordinate origin in the software). Now the CNC Bit should be about 5 mm away from the material.

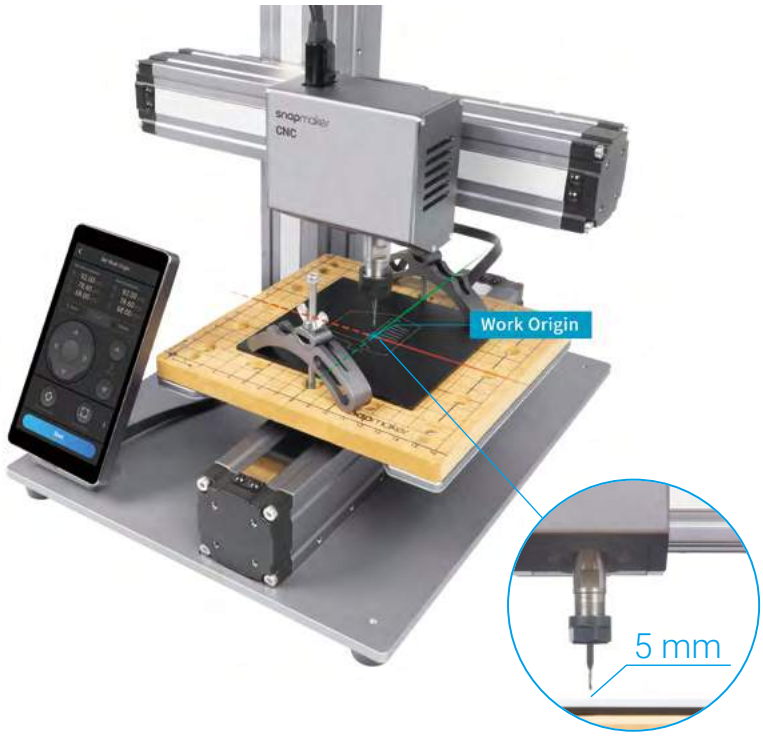

3. Place the Calibration Card or a piece of A4 paper between the CNC Bit and the material. Keep adjusting the height of the CNC Bit using **Z-** or **Z+** buttons until you feel slight resistance when you pull out the Calibration Card, and it should be wrinkled when you push it forward. Tap **Set Work Origin**.

4. Tap **Z+** to lift the CNC Bit until it is above the clamp set, and then tap **Run Boundary** to check if the Work Origin is proper. If any part of the boundary trailed by the CNC Bit goes outside of the material, or if the CNC Bit runs into any portions of the machine, reset the Work Origin and run boundary again.

If you have run boundary with the CNC Bit above the clamp set, you can lower the CNC bit to run boundary again.

If the CNC Bit runs into any portions of the machine, power off the machine immediately and check if the CNC Bit is damaged. If so, change the CNC Bit.

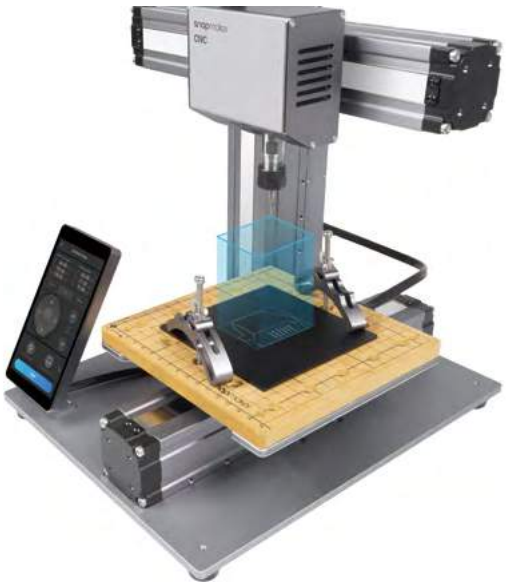

5. Tap **Start** to start carving.

5.3.3 Clean the Finished Work and the Machine

Guides & Pictures / Snapmaker

1. Remove the clamp set from the CNC Carving Platform.

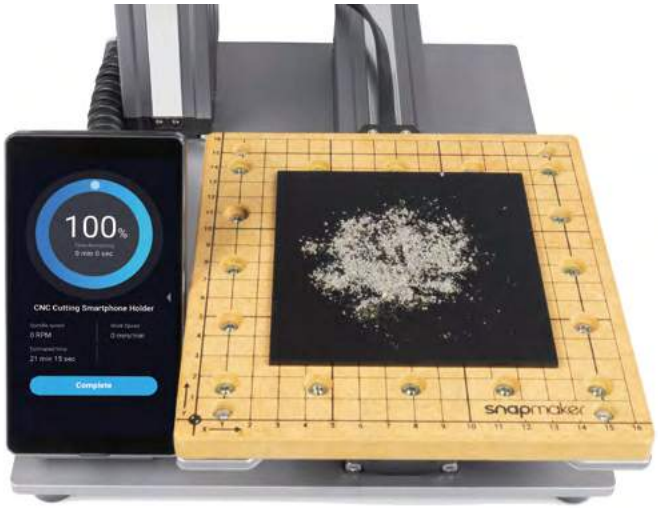

2. Clean the finished work and the machine with a dust collector, and then remove the finished work using the diagonal pliers.

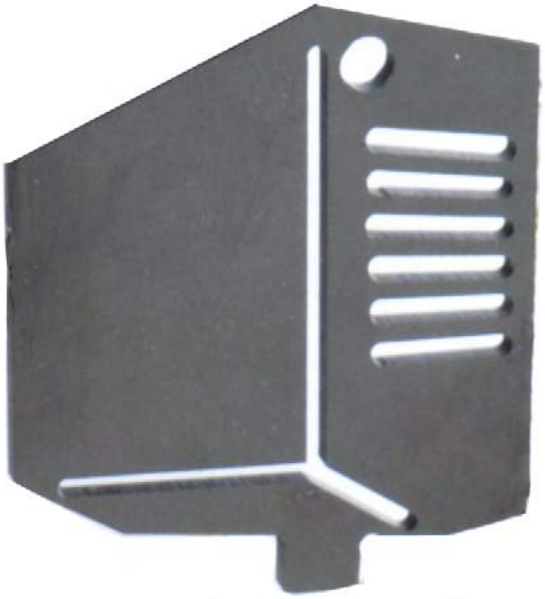

Share!

Share your finished work in our Facebook group and our forum.

Resources

This guide is subject to change. The latest version is on our Support website: Select **Snapmaker 2.0** -> Go to **Quick Start Guide**.
https://support.snapmaker.com/hc/en-us

Besides this guide, a User Manual is available on our Support website: Select **Snapmaker 2.0** -> Go to **User Manual**.
https://support.snapmaker.com/hc/en-us

We are here for you whenever you need general information or technical support:
support@snapmaker.com.

For any sales inquiries:
sales@snapmaker.com.

For product purchases:
https://shop.snapmaker.com.

Share anything you want with other Snapmaker users in our forum:
https://forum.snapmaker.com.

$$\int_{0}^{\text{Wonderful}} \text{make}(x)dx = \text{snapmaker}$$

Original Instruction

Y.3.B.A.0006-01 V1.3.0